767-300ER

KLM ROYAL DUTCH AIRLINES

WEIGHT AND BALANCE
CONTROL AND LOADING MANUAL

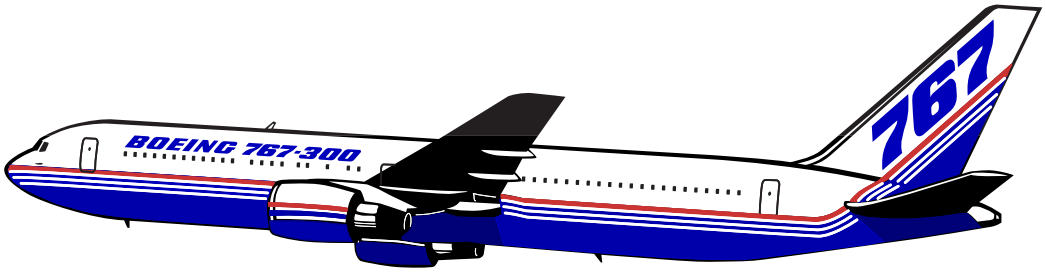

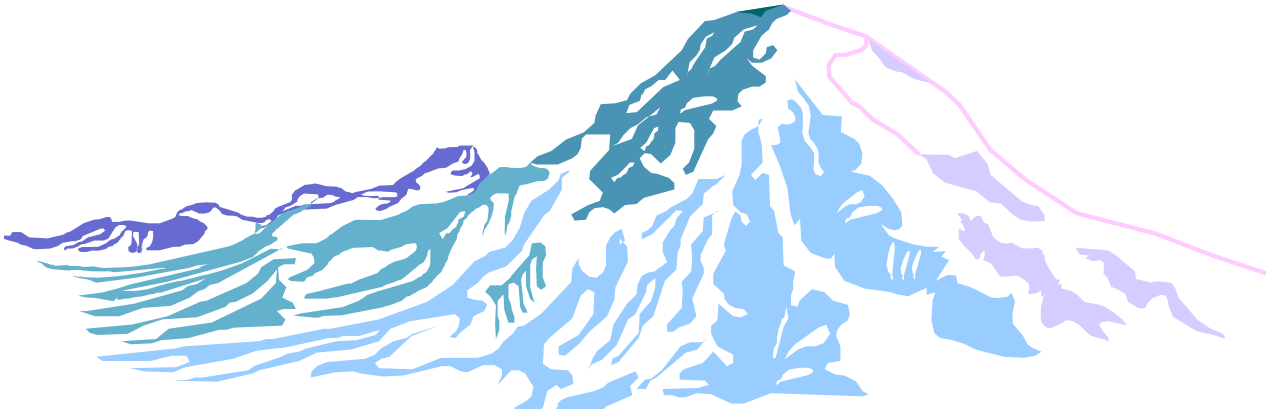

Export controlled by ECCN 9E991

No License is required for the dissemination of the commercial information contained herein to foreign persons other than those from or in terrorist supporting countries identified in the EAR. It is the responsibility of the individual in control of this data to abide by U.S. export laws.

Copyright © 2000-2014 Boeing. All rights reserved.

The Boeing Company claims copyright in each page of this document only to the extent that the page contains copyrightable subject matter. The Boeing Company also claims copyright in the document as a compilation and/or collective work.

BOEING PROPRIETARY

This document includes proprietary information owned by The Boeing Company and/or one or more third parties. Treatment of the document and the information it contains is governed by contract with Boeing.

Boeing Commercial Airplanes
Weight Engineering Organization
P.O. Box 3707 Seattle, Washington 98124

Boeing Document No. D043T530-KLM1

-BOEING PROPRIETARY-

INTRODUCTION (Continued)

INTRODUCTION

The data presented in this manual are in compliance with Federal Aviation Regulations Part 25, Paragraphs 25.29; 25.471 (b); 25.1519 and 25.1583 (c); and are provided for the purpose of establishing the Model 767-300ER weight and balance requirements and allowables.

This manual presents all the weight and balance information necessary to ensure safe airplane operation. In addition, information is provided to allow the operator to efficiently plan loading procedures in such a manner that maximum payload capability is safely distributed for any type of operation.

The Weight and Balance Manual is organized following the guidelines of the Air Transport Association (ATA) Specification 2200 (iSpec 2200), “Information Standards for Aviation Maintenance”. Accordingly, the weight and balance data is presented in two chapters.

CHAPTER 1 - CONTROL

Control contains all weight and balance data specifically related to the customer aircraft. The data presented in this chapter is modular, with groups of related information provided in discreet subject packages, each of which is uniquely identified by a three element Chapter-Section-Subject number (CHP-SEC-SUB). Major data groupings for the Chapter-Sections are as follows:

CHAPTER - SECTION	MAJOR DATA GROUPING
1- 00 through 1- 09	General
1- 20 through 1- 29	Fuel
1- 30 through 1- 39	Fluids
1- 40 through 1- 49	Personnel
1- 60 through 1- 69	Cargo
1- 80 through 1- 89	Ground Operations
1- 90 through 1- 99	Examples

The two digit section (SEC) element allows for ten distinct topics within each major group of data (e.g. 20 through 29 for Fuel). The subject (SUB) element is primarily used to uniquely identify topically identical data for varying aircraft configurations. However, in some cases the subject (SUB) element is used to further subdivide topical information.

The Chapter 1 document includes only those topics that apply to the airplanes called out in the “Airplane Configuration” section of the document. The CHP-SEC-SUB number, page numbering, revision date and document number appear on the lower outside corner of each page.

Changes within a revised CHP-SEC-SUB are identified with a solid bar in the outside margin, adjacent to the change. The date for the CHP-SEC-SUB will be revised and the changes will be noted in the revision highlights.

To determine if you have received a complete document, check each section listed in the “Table of Contents” and confirm that the section is included in this document. The total number of pages for each section is specified at the bottom of every page contained within it (e.g. “Page 1 of 4”, where “4” represents the total number of pages in the section).

APPLICABLE CONFIGURATIONS
All

-BOEING PROPRIETARY-

INTRODUCTION (Continued)

MANAGING AIRCRAFT CONFIGURATIONS

The “Airplane Configuration” section of this document lists all aircraft covered in this document, along with the allowable configurations associated with each aircraft. Restrictions and limitations for each association of a configuration with a specific aircraft serial number are defined in the same section under the heading “Configuration Qualifications”.

The data presented within each CHP-SEC-SUB module apply to the aircraft configuration(s) listed in the “Applicable Configurations” box at the bottom of each page. The word “All” signifies that the data is applicable to all configurations listed in the “Airplane Configuration” section of this document, whereas data that is applicable to specific aircraft configurations will list only the appropriate configuration letter(s) in the “Applicable Configurations” box.

DOCUMENT NUMBERING

For all 767-300ER Chapter 1 Manuals, document numbering will use the following convention:

D043T5[Y][Z]-[ccc][X]

where **[Y]** = Minor Model Designator (e.g. “3” for a -300 Minor Model)

[Z] = Derivative Designator (0=Passenger, 1=Combi, 2=Freighter, 3=Convertible, 4=Special Freighter, 5=Miscellaneous)

[ccc] = Airline 3-Letter Designator (As per Boeing Standard Designators - CCID)

[X] = Document Serial Number (This will always be “1” unless an airline has multiple Weight & Balance Manuals for a given derivative model.)

CHAPTER 2 - AIRCRAFT REPORTS

The Aircraft Report (covered in a separate document) contains weight and balance data specifically related to each delivered aircraft of the customer's fleet. The data includes: make, model, serial number, registration identification, actual weighing data, and inventory list for the delivery configuration of each aircraft.

APPLICABLE CONFIGURATIONS
All

-BOEING PROPRIETARY-

Highlights Revision No: 13

This revision increases the Maximum Landing Weight from 304000 LB to 320000 LB for Serial Numbers 27612 (VL899) and 27614 (VL900) per Master Change 0310MK6489.

All pages in this document have been marked as Boeing Proprietary.

GENERAL

- Added Section 1-02-074 to manual.
- Added Configuration “H” per Master Change 0310MK6489.

TITLE PAGE

- Added copyright and Boeing proprietary notes.
- Added Derivative Designator 5=Miscellaneous on page 2.

TABLE OF CONTENTS

- Updated for this revision.

AIRPLANE CONFIGURATION

- Assigned Configuration “H” to Serial Number 27612 per Master Change 0310MK6489.
- Assigned Configuration “H” to Serial Number 27614 per Master Change 0310MK6489.
- Removed Configuration “B” from Serial Number 27612 per Master Change 0310MK6489.
- Removed Configuration “B” from Serial Number 27614 per Master Change 0310MK6489.

INTERIOR EFFECTIVITY

- Updated for this revision.

1-00-046

- Revised to update body station data on page 1.

1-02-074

- Applicable Configuration(s) set to “H”.

1-63-001

- Revised TSO-C90 reference on page 1.

1-63-021

- Revised TSO-C90 reference on page 1.

1-69-002

- Revised sample problem 1 on page 3. Changed the imbalance moment total to 378400 LB-IN.
- Changed Applicable Configuration(s) from “B, C, D, E, F, G” to “B, C, D, E, F, G, H”.

1-69-024

- Changed Applicable Configuration(s) from “B, C, D, E, F, G” to “B, C, D, E, F, G, H”.

APPLICABLE CONFIGURATIONS
All

-BOEING PROPRIETARY-

Highlights Revision No: 12

This revision increases the Maximum Taxi Weight to 413000 LB and Maximum Takeoff Weight to 412000 LB for Serial Number 28884 (VS136) per Master Change 0310MK6461. In addition, other miscellaneous changes have been made to the manual. Details of the changes are listed below.

GENERAL

- Added Section 1-02-136 to manual.
- Added Configuration “G” per Master Change 0310MK6461.

TABLE OF CONTENTS

- Updated for this revision.

AIRPLANE CONFIGURATION

- Assigned Configuration “G” to Serial Number 28884 per Master Change 0310MK6461.
- Removed Configuration “A” from Serial Number 28884 per Master Change 0310MK6461.

INTERIOR EFFECTIVITY

- Updated for this revision.

1-00-001

- Updated definations.

1-02-136

- Applicable Configuration(s) set to “G”.

1-48-001

- Clarify that the Generic Layout is 767-300 and 767-300ER.

1-62-402

- Updated the bulk cargo information on page 2.

1-62-601

- Updated the bulk cargo information on page 2.

1-63-001

- Updated size code information on page 1.

1-63-021

- Updated the size code information on page 1.

1-68-001

- Updated the general information paragraph in page 1.

1-69-002

- Changed Applicable Configuration(s) from “B, C, D, E, F” to “B, C, D, E, F, G”.

1-69-024

- Changed Applicable Configuration(s) from “B, C, D, E, F” to “B, C, D, E, F, G”.

APPLICABLE CONFIGURATIONS
All

-BOEING PROPRIETARY-

Highlights Revision No: 11

This revision decreases MTOW from 412000 LB to 400000 LB and MTW from 413000 LB to 401000 LB plus MLW from 320000 LB to 304000 LB for Serial Number 28098 (VL895) upon incorporation of Master Change 0310MK6450.

GENERAL

- Added Section 1-02-156 to manual.
- Added Section 1-48-001 to manual.
- Added Configuration “E” per Master Change 0310MK6450.
- Added Section 1-48-001 to Configuration “A” .
- Added Section 1-48-001 to Configuration “B” .
- Added Section 1-48-001 to Configuration “C” .
- Added Section 1-48-001 to Configuration “D” .
- Added Section 1-48-001 to Configuration “F” .

TITLE PAGE

- Updated EAR99 classification designation.
- Updated 9E991 classification designation.

TABLE OF CONTENTS

- Updated for this revision.

AIRPLANE CONFIGURATION

- Assigned Configuration “E” to Serial Number 28098 per Master Change 0310MK6450.
- Removed Configuration “D” from Serial Number 28098 per Master Change 0310MK6450.

INTERIOR EFFECTIVITY

- Updated for this revision.

1-00-001

- Added metric conversion factors.

1-02-156

- Applicable Configuration(s) set to “E”.

1-48-001

- Applicable Configuration(s) set to “All”.

1-60-001

- Revised Floor Loading LB/IN & KG/IN data for Fwd Cargo Hold and Note (d).
- Revised Note (d) sentence structure.

1-60-401

- Note revised on Cumulative Load Check.

1-60-601

- Note revised on Cumulative Load Check.

1-66-002

- Correct B.A. In Data in both LBS & KG tables.

1-69-002

- Changed Applicable Configuration(s) from “B, C, D, F” to “B, C, D, E, F”.

APPLICABLE CONFIGURATIONS
All

-BOEING PROPRIETARY-

HIGHLIGHTS REVISION NO: 11 (Continued)

1-69-024

- Changed Applicable Configuration(s) from “B, C, D, F” to “B, C, D, E, F”.

APPLICABLE CONFIGURATIONS
All

-BOEING PROPRIETARY-

Highlights Revision No: 10

This revision increases MTOW from 400000 LB to 408000 LB per Master Change 0310MK6332 and increases MLW from 304000 LB to 320000 LB per Master change 0310MK6411 for Serial Number 26263 (VL893).

GENERAL

- Added Section 1-02-147 to manual.
- Removed Section 1-02-146 from manual.
- Removed Configuration “E” (no longer applicable).
- Added Section 1-02-147 to Configuration “F” per Master Changes 0310MK6332 and 0310MK6411.
- Added Section 1-69-002 to Configuration “F” .
- Added Section 1-69-024 to Configuration “F” .
- Removed Section 1-02-146 from Configuration “F” (no longer applicable).

TABLE OF CONTENTS

- Updated for this revision.

AIRPLANE CONFIGURATION

- Assigned Configuration “B” to Serial Number 27611 to correct data.
- Assigned Configuration “B” to Serial Number 27612 to correct data.
- Assigned Configuration “B” to Serial Number 27614 to correct data.
- Removed Configuration “E” from Serial Number 27611 to correct data.
- Removed Configuration “E” from Serial Number 27612 to correct data.
- Removed Configuration “E” from Serial Number 27614 to correct data.

INTERIOR EFFECTIVITY

- Updated for this revision.

1-02-137

- Changed Applicable Configuration(s) from “B, E” to “B”.

1-02-147

- Applicable Configuration(s) set to “F”.

1-62-402

- Updated cross references to sections.

1-69-002

- Changed Applicable Configuration(s) from “B, C, D” to “B, C, D, F”.

1-69-024

- Changed Applicable Configuration(s) from “B, C, D” to “B, C, D, F”.

APPLICABLE CONFIGURATIONS
All

-BOEING PROPRIETARY-

Highlights Revision No: 9

This revision adds alternate forward center of gravity limits at 19% and 22% MAC for Serial Number 26263 (VL893) per Master Change 0351MK6025.

GENERAL

- Added Section 1-02-146 to manual.
- Added Configuration “F” per Master Change 0351MK6025.

TABLE OF CONTENTS

- Updated for this revision.

AIRPLANE CONFIGURATION

- Assigned Configuration “F” to Serial Number 26263 per Master Change 0351MK6025.
- Removed Configuration “A” from Serial Number 26263 per Master Change 0351MK6025.

INTERIOR EFFECTIVITY

- Added variable number column to the table.

1-02-146

- Applicable Configuration(s) set to “F”.

APPLICABLE CONFIGURATIONS
All

-BOEING PROPRIETARY-

Highlights Revision No: 8

This revision increases Maximum Landing Weight from 304000 LB to 320000 LB per Master Change 0310MK6353 for Serial Number 27957 (VL891).

GENERAL

- Removed Section 1-02-136 from manual.
- Removed Configuration “F” (no longer applicable).

TABLE OF CONTENTS

- Updated for this revision.

AIRPLANE CONFIGURATION

- Assigned Configuration “D” to Serial Number 27957 per Master Change 0310MK6353.
- Removed Configuration “F” from Serial Number 27957 per Master Change 0310MK6353.

INTERIOR EFFECTIVITY

- Updated for this revision.

1-69-002

- Changed Applicable Configuration(s) from “B, C, D, F” to “B, C, D”.

1-69-024

- Changed Applicable Configuration(s) from “B, C, D, F” to “B, C, D”.

APPLICABLE CONFIGURATIONS
All

-BOEING PROPRIETARY-

Highlights Revision No: 7

This revision increases Maximum Takeoff Weight from 400000 LB to 412000 LB per Master Change 0310MK6334 for Serial Number 27957 (VL891).

GENERAL

- Added Section 1-02-136 to manual.
- Added Configuration “F” per Master Change 0310MK6334.

TITLE PAGE

- Removed the customer specific model designator.
- Added EAR99 classification designation.

TABLE OF CONTENTS

- Updated for this revision.

AIRPLANE CONFIGURATION

- Removed registry numbers.
- Assigned Configuration “F” to Serial Number 27957 per Master Change 0310MK6334.
- Removed Configuration “A” from Serial Number 27957 per Master Change 0310MK6334.

INTERIOR EFFECTIVITY

- Updated for this revision.

1-02-036

- Revised to add interpolation note.

1-02-040

- Revised to add interpolation note.

1-02-050

- Revised to add interpolation note.

1-02-136

- Applicable Configuration(s) set to “F”.

1-02-137

- Revised to add interpolation note.

1-06-002

- Remove Tolerance Note for trim settings in the Green Band.

1-40-001

- Revised the paragraph under passengers.

1-60-001

- Section number reference changed from “1-60-04x” to “1-60-40x”, “1-60-06x” to “1-60-60x”, “1-66-02x” to “1-66-2xx” and “1-66-06x” to “1-66-6xx”.

1-60-202

- Section number changed from “1-60-022” to “1-60-202” and the section number reference changed from “1-60-04x” to “1-60-40x”, “1-60-06x” to “1-60-60x”.

1-60-401

- Section number changed from “1-60-041” to “1-60-401” and the section number reference changed from “1-60-02x” to “1-60-20x”.

APPLICABLE CONFIGURATIONS
All

-BOEING PROPRIETARY-

HIGHLIGHTS REVISION NO: 7 (Continued)

1-60-601

- Section number changed from “1-60-061” to “1-60-601” and the section number reference changed from “1-60-02x” to “1-60-20x”.

1-62-402

- Section number changed from “1-62-042” to “1-62-402”.

1-62-601

- Section number changed from “1-62-061” to “1-62-601”.

1-62-801

- Section number changed from “1-62-081” to “1-62-801”.

1-64-201

- Section number changed from “1-64-021” to “1-64-201”.

1-64-601

- Section number changed from “1-64-061” to “1-64-601”.

1-66-201

- Section number changed from “1-66-021” to “1-66-201”.

1-66-601

- Section number changed from “1-66-061” to “1-66-601”.

1-68-001

- The section number reference changed from “1-60-02x” to “1-60-20x”.

1-69-002

- Changed Applicable Configuration(s) from “B, C, D” to “B, C, D, F”.

1-69-024

- Changed Applicable Configuration(s) from “B, C, D” to “B, C, D, F”.

1-84-001

- Added a bullet in towing and tipping considerations and added a note.

1-90-001

- Revised ordering information.

APPLICABLE CONFIGURATIONS
All

-BOEING PROPRIETARY-

Highlights Revision No: 6

This revision increases the Maximum Takeoff Weight from 400000 LB to 407000 LB per Master Change 0310MK6352 for Serial Numbers 27611 (VL898), 27612 (VL899) and 27614 (VL900). In addition, this revision makes miscellaneous changes to the manual. Details of changes made to each section are listed below.

GENERAL

- Added Configuration “E” per Master Change 0310MK6352.

TABLE OF CONTENTS

- Updated for this revision.

AIRPLANE CONFIGURATION

- Assigned Configuration “E” to Serial Numbers 27611, 27612 and 27614 per Master Change 0310MK6352.
- Removed Configuration “A” from Serial Numbers 27611, 27612 and 27614 per Master Change 0310MK6352.
- Revised registry number for Serial Numbers 27959 and 27960.

INTERIOR EFFECTIVITY

- Updated for this revision.

1-02-137

- Changed Applicable Configuration(s) from “B” to “B, E”.

1-62-081

- Revised paragraph on pg.3 about bulk cargo information.

1-66-002

- Revised the note on page 3 and the footnote (a) on the table.
- Added the footnote (e) to the drawing on page 1.

1-66-021

- Added a loading consideration bullet on page 2 for cargo movement and added a note on page 3 for restraints.

1-66-061

- Revised the note on page 3 and the footnote (a) on the table.

1-68-001

- Revised the “General Information” section on page 1 regarding tiedowns for ULDs.

APPLICABLE CONFIGURATIONS
All

-BOEING PROPRIETARY-

Highlights Revision No: 5

This revision increases the Maximum Takeoff Weight from 400000 LB to 412000 LB and the Maximum Landing Weight from 304000 LB TO 320000 LB per Master Change 0310MK6359 for Serial Number 28098 (VL895).

GENERAL

- Added Section 1-02-036 to manual.
- Added Configuration “D” per Master Change 0310MK6359.

TABLE OF CONTENTS

- Updated for this revision.

AIRPLANE CONFIGURATION

- Assigned Configuration “D” to Serial Number 28098 per Master Change 0310MK6359.
- Removed Configuration “A” from Serial Number 28098 per Master Change 0310MK6359.
- Revised registry number for Serial Number 28098.

INTERIOR EFFECTIVITY

- Updated for this revision.

1-02-036

- Applicable Configuration(s) set to “D”.

1-69-002

- Changed Applicable Configuration(s) from “B, C” to “B, C, D”.

1-69-024

- Changed Applicable Configuration(s) from “B, C” to “B, C, D”.

APPLICABLE CONFIGURATIONS
All

-BOEING PROPRIETARY-

Highlights Revision No: 4

This revision increases the Maximum Takeoff Weight from 400000 LB to 407000 LB per Master Change 0310MK6352 for Serial Numbers 27959 and 27960. In addition, this revision increases the Maximum Landing Weight from 304000 LB to 320000 LB per Master Change 0310MK6353 and adds alternate forward center of gravity limits of 20% and 25% MAC for takeoff performance improvement per Master Change 0351MK6025 for Serial Number 27610.

GENERAL

- Added Section 1-02-137 to manual.
- Removed Section 1-02-136 from manual.
- Revised Configuration “B” per Master Change 0310MK6352.

TABLE OF CONTENTS

- Updated for this revision.

AIRPLANE CONFIGURATION

- Assigned Configuration “B” to Serial Number 27959 per Master Change 0310MK6352.
- Assigned Configuration “B” to Serial Number 27960 per Master Change 0310MK6352.
- Assigned Configuration “C” to Serial Number 27610 per Master Changes 0310MK6353 and 0351MK6025.
- Removed Configuration “A” from Serial Number 27959 per Master Change 0310MK6352.
- Removed Configuration “A” from Serial Number 27960 per Master Change 0310MK6352.
- Removed Configuration “B” from Serial Number 27610 per Master Changes 0310MK6353 and 0351MK6025.
- Revised registry number for Serial Number 26263.

INTERIOR EFFECTIVITY

- Updated for this revision.

1-02-137

- Applicable Configuration(s) set to “B”.

APPLICABLE CONFIGURATIONS
All

-BOEING PROPRIETARY-

Highlights Revision No: 3

This revision increases the MLW from 304000 LB to 320000 LB per Master Change 0310MK6353 for serial number 27958. This revision also adds alternate forward center of gravity limits at 20% and 25% MAC for takeoff performance improvement per Master Change 0351MK6025 for serial number 27958.

GENERAL

- Added Section 1-02-050 to manual.
- Added Configuration “C” per Master Changes 0310MK6353 and 0351MK6025.

TITLE PAGE

- Updated reference of Air Transport Association (ATA) Specification No. 100 to i2200, “Information Standards for Aviation Maintenance”.

TABLE OF CONTENTS

- Updated for this revision.

AIRPLANE CONFIGURATION

- Assigned Configuration “C” to Serial Number 27958 per Master Changes 0310MK6353 and 0351MK6025.
- Removed Configuration “B” from Serial Number 27958 per Master Changes 0310MK6353 and 0351MK6025.
- Revised registry number for Serial Number 27958.

INTERIOR EFFECTIVITY

- Updated for this revision.

1-00-001

- Added additional definitions.

1-02-050

- Applicable Configuration(s) set to “C”.

1-63-001

- Revised LD-2 dimension label.

1-69-002

- Changed Applicable Configuration(s) from “B” to “B, C”.

1-69-024

- Changed Applicable Configuration(s) from “B” to “B, C”.

1-80-081

- Added equations to jack point scales.

1-82-001

- Revised sentence for airplane weighing on Page 1. Revised wording on table from “Nose up” to “Tail down” to reflect wording of actual airplane placard.

APPLICABLE CONFIGURATIONS
All

-BOEING PROPRIETARY-

Highlights Revision No: 2

This revision increases the Maximum Takeoff Weight from 400000 LB to 412000 for Serial Numbers 27610 and 27958 per Master Change 0310MK6343. In addition, this revision makes miscellaneous changes to the manual. Details of changes made to each section are listed below.

GENERAL

- Added Section 1-02-136 to manual.
- Added Section 1-69-002 to manual.
- Added Section 1-69-024 to manual.
- Added Configuration “B” per Master Change 0310MK6343.

TITLE PAGE

- Reinserted missing text on page 2.

TABLE OF CONTENTS

- Updated for this revision.

AIRPLANE CONFIGURATION

- Revised paragraph to redefine applicability of data.
- Assigned Configuration “B” to Serial Number 27610 per Master Change 0310MK6343.
- Assigned Configuration “B” to Serial Number 27958 per Master Change 0310MK6343.
- Removed Configuration “A” from Serial Number 27610 per Master Change 0310MK6343.
- Removed Configuration “A” from Serial Number 27958 per Master Change 0310MK6343.
- Revised registry number for Serial Number 27957.

INTERIOR EFFECTIVITY

- Updated for this revision.

1-02-001

- Added information to interpolate between inflection points for certified weight and center of gravity limits. Removed operational empty weight variation.
- Added “taxi” to operations which need airplane balance accounted for, removed reference to Federal Aviation Regulations Part 121, and added reference to Advisory Circular AC 120-27D.
- Revised last paragraph under “Operational Weight and Center of Gravity Requirements”.
- Updated reference of Advisory Circular 120-27D to Advisory Circular 120-27E.

1-02-040

- Added reference to Airplane Maintenance Manual Section 12-15-03 for tire pressure requirements.
- Changed Applicable Configuration(s) from “All” to “A”.

1-02-136

- Applicable Configuration(s) set to “B”.

1-22-001

- Revised the reference to the Airplane Flight Manual to Section 1.

1-32-002

- Corrected potable water tank naming terminology to align with Boeing Maintenance Manual.

1-40-001

- Revised data per FAA Advisory Circular 120-27D.
- Updated reference of Advisory Circular 120-27D to Advisory Circular 120-27E.

APPLICABLE CONFIGURATIONS
All

-BOEING PROPRIETARY-

HIGHLIGHTS REVISION NO: 2 (Continued)

1-66-061

- Revised to move side restraint outboard and changed from side restraint/vertical restraint to side restraint on page 1.

1-69-002

- Applicable Configuration(s) set to “B”.

1-69-024

- Applicable Configuration(s) set to “B”.

1-82-001

- Updated referenced FAA Advisory Circular from AC 120-27C to 120-27E.

1-90-001

- Removed reference to standardized loading schedule.

APPLICABLE CONFIGURATIONS
All

-BOEING PROPRIETARY-

Highlights Revision No: 1

This revision updates fuel volume for all serial numbers per PRR B12030-2 and makes miscellaneous changes to the manual. Details of changes made to each section are listed below.

GENERAL

- Added Section 1-20-005 to manual.
- Added Section 1-24-002 to manual.
- Added Section 1-24-023 to manual.
- Removed Section 1-20-003 from manual.
- Removed Section 1-24-001 from manual.
- Removed Section 1-24-022 from manual.
- Added Section 1-20-005 to Configuration “A” to revise fuel quantities.
- Added Section 1-24-002 to Configuration “A” to revise fuel quantities.
- Added Section 1-24-023 to Configuration “A” to revise fuel quantities.
- Removed Section 1-20-003 from Configuration “A” (no longer applicable).
- Removed Section 1-24-001 from Configuration “A” (no longer applicable).
- Removed Section 1-24-022 from Configuration “A” (no longer applicable).

TITLE PAGE

- Revised document numbering system.

TABLE OF CONTENTS

- Updated for this revision.

AIRPLANE CONFIGURATION

- Updated for this revision.

INTERIOR EFFECTIVITY

- Updated for this revision.

1-00-001

- Added minimum flight weight paragraph.

1-06-002

- Extended takeoff stab trim settings to a max takeoff weight of 420,000 lb.
- Added reference to the Airplane Flight Manual for operations with fixed derate.

1-20-005

- Applicable Configuration(s) set to “All”.

1-24-002

- Applicable Configuration(s) set to “All”.

1-24-023

- Applicable Configuration(s) set to “All”.

1-30-002

- Revised hydraulic fluid quantity and location due to new volume analysis information.

1-32-002

- Revised the B.A. location of the lines from 1028.0 to 893.0.

1-44-034

- Updated observer“s seat information. Deleted reference to galley loads data.

APPLICABLE CONFIGURATIONS
All

-BOEING PROPRIETARY-

HIGHLIGHTS REVISION NO: 1 (Continued)

1-60-001

- Moved paragraph on page 2 before the drawing on linear load limits.
- Removed the “Linear Loading” subtitle and consolidated two columns to “Floor Loading” subtitle on page1. Replaced “certified” with “approved” in the footnote (c) and (e). Added labels on page 2 drawing.

1-60-061

- Changed wording in text and tables to generalize the aft body cumulative load check.
- Removed period after LB and KG in the table on page 9.

1-62-042

- Revised bulk cargo information.

1-62-061

- Revised bulk cargo information.

1-62-081

- Revised bulk cargo information.

1-63-001

- Added non-approved ULD criteria, revised caution notes and changed “certified” to “approved”.

1-63-021

- Added non-approved ULD criteria, revised caution notes and changed “certified” to “approved”.

1-66-002

- Revised Missing/Inoperative restraints notes page 2.
- Revised zones.
- Added legend data to the drawing on page one and corrected some numbers in the tables.

1-66-021

- Revised drawing page 1, to show updated side restraints. Revised loading considerations paragraph page 2. Revised Missing/Inoperative restraints page 4, for left Size Code L and right Size Code M.

1-66-061

- Revised Missing/Inoperative restraints notes page 2.
- Revised zones.

1-68-001

- Corrected header for the table of contents.
- Revised “General Information” section regarding tiedowns for ULDs.

1-86-063

- Corrected header for the table of contents.

1-90-001

- Revised contacts on ordering instructions.
- Changed reference from Customer Services and Material Support to Data and Services Management on page 1.

APPLICABLE CONFIGURATIONS
All

-BOEING PROPRIETARY-

Highlights Revision No: Original Release

The information in this document (D043T530-KLM1) replaces and supersedes the information in “Weight and Balance Control and Loading Manual”, document D043T541, Revision 5. The old document (D043T541) will no longer be revised or kept up to date and should either be destroyed or archived for historical purposes.

This new document reflects an improved, standardized format for Weight and Balance Manuals produced by the Boeing Commercial Airplane Group. We are presently in the process of migrating all current production model Weight & Balance Manuals to this standard format.

There are significant changes in the presentation and arrangement of data within this document; much of the information provided has been reworked to improve its usefulness. The content of this document should be considered equivalent to the current D043T541, Revision 5; which is the last and final revision issued for that document.

Note that the method of associating Chapter-Section-Subject (CHP-SEC-SUB) data sections to the aircraft to which they apply is different than the method previously used on 767-300 Weight and Balance Manuals. The new method is described in the introduction to this document.

Also, all interior arrangement data is now collected into one CHP-SEC-SUB data section (1-44-034), and a new section, “Interior Effectivity”, has been added to associate individual interior data sets in 1-44-034 to the aircraft serial numbers on which they are certified.

Furthermore, the data formerly included in the “Effective Pages” and “Table of Contents” has been merged so that for each top level entry in the new “Table of Contents”, the following information is shown: the section title, the CHP-SEC-SUB number, the current revision date, and the Configuration letters associated with it (unless the section applies to every configuration in the manual, in which case the word “All” is shown). The total number of pages for each section is specified at the bottom of every page contained within (e.g. “Page 1 of 4”, where “4” represents the total number of pages in the section).

The following is a more itemized explanation of what revisions have been made.

Added S/N 30393 to the manual.

1-0X-XXX

Revised body diameter from 16'8” to 16'6”.

Added definitions.

Added cold weather operation for CIS operators.

Added minimum flight weight of 179,000 lbs. to weight page.

Closed off stab trim tables.

Added definition of waterline to balance reference system.

1-2X-XXX

Reformated data.

Removed overwing fuel capacity for weight.

APPLICABLE CONFIGURATIONS
All

-BOEING PROPRIETARY-

HIGHLIGHTS REVISION NO: ORIGINAL RELEASE (Continued)

Added tables for every 400 l volume.

1-3X-XXX

Corrected systems fluids data.

1-4X-XXX

120-27C update.

Revised LOPA-673-398 revision E to J. Revised to show B.A. on purser station.

1-6X-XXX

Added combined load limits.

Improved cumulative load limits presentation and expanded example.

Added size code L pallets and missing/inoperative restraint data.

Added B.A., B.B.L., and W.L. of tiedown locations.

Expanded tiedown example.

Update BA for lower lobe cargo handling system.

Updated lateral and longitudinal c.g. range for ULD's to reflect + or - 10% of the ULD base.

Updated volumes for ULD's. Revised format for side restraint missing/inoperative restraint data for K,P,Q.

Added a note that requires all lateral guides to be in the “up” position for dispatch.

Removed all zones for K,P,Q containers that have zero capability or that transverse over a lateral guide.

Added a note that the bulk cargo net must be installed for dispatch.

Added a note that states that bulk cargo that could cause a large c.g. shift in airplane c.g. must be tied down.

Updated missing/inoperative restraint data for size code K, P, and Q.

Updated missing/inoperative restraint data for size code A, L and M. Also, the maximum capability and missing/inoperative restraint data for the size codes are shown by compartment instead of pallet position (i.e. all of the size code A ULD's in the forward hold are in one column of data).

Corrected cargo configuration (provisions only for size code N).

1-8X-XXX

Added fwd and aft axle BA data.

Revised component weight data.

Added towing and tipping section.

1-9X-XXX

Section removed and replaced with document number D043T630-TBC02 entitled “Loading Schedule Substantiation for Example Universal Index Type System”.

APPLICABLE CONFIGURATIONS
All

-BOEING PROPRIETARY-

HIGHLIGHTS REVISION NO: ORIGINAL RELEASE (Continued)

APPLICABLE CONFIGURATIONS
All

-BOEING PROPRIETARY-

TABLE OF CONTENTS

TITLE	CHP-SEC-SUB	DATE/PAGE	CONFIGURATION
PREFACE			
INTRODUCTION		12/11/2013	All
Chapter 1 - Control		1	
Managing Aircraft Configurations		2	
Document Numbering		2	
Chapter 2 - Aircraft Reports		2	
HIGHLIGHTS REVISION NO: 13		2/5/2014	All
HIGHLIGHTS REVISION NO: 12		4/13/2012	All
HIGHLIGHTS REVISION NO: 11		6/30/2011	All
HIGHLIGHTS REVISION NO: 10		6/18/2009	All
HIGHLIGHTS REVISION NO: 9		5/21/2009	All
HIGHLIGHTS REVISION NO: 8		4/23/2009	All
HIGHLIGHTS REVISION NO: 7		1/9/2009	All
HIGHLIGHTS REVISION NO: 6		10/30/2006	All
HIGHLIGHTS REVISION NO: 5		6/13/2006	All
HIGHLIGHTS REVISION NO: 4		3/24/2006	All
HIGHLIGHTS REVISION NO: 3		1/18/2006	All
HIGHLIGHTS REVISION NO: 2		8/25/2005	All
HIGHLIGHTS REVISION NO: 1		8/21/2002	All
HIGHLIGHTS REVISION NO: ORIGINAL RELEASE		1/26/2000	All
AIRPLANE CONFIGURATION		2/5/2014	All
Configuration Assignment		1	
Configuration Qualifications		1	
INTERIOR EFFECTIVITY		2/5/2014	All
Main Cabin		1	
GENERAL			
GENERAL INFORMATION	1-00-001	3/26/2012	All
Weight and Balance Definitions		1	
Abbreviations		5	
Conversion Factors		6	
AIRPLANE DIMENSIONS	1-00-026	5/27/1999	All
General Arrangement and Primary Dimensions		1	
BALANCE REFERENCE SYSTEM	1-00-046	1/17/2014	All
Balance Arms / Body Stations		1	
Mean Aerodynamic Chord		2	
Body Buttock Line		2	
Water Line		2	

APPLICABLE CONFIGURATIONS
All

-BOEING PROPRIETARY-

TABLE OF CONTENTS (Continued)

TITLE	CHP-SEC-SUB	DATE/PAGE	CONFIGURATION
FACTORS AFFECTING PERFORMANCE AND OPERATIONAL LIMITATIONS	1-02-001	7/27/2005	All
Interpolation of Certified Center of Gravity Limits		1	
Operational Weight and Center of Gravity Requirements		1	
Commonwealth of Independent States (CIS) Requirements		2	
CERTIFIED WEIGHT AND CENTER OF GRAVITY LIMITS	1-02-036	1/9/2009	D
Certified Weight Limits - MTW 413000 LB (187333 KG)		1	
Limitations		1	
Interpolation of Certified Center of Gravity Limits		1	
C.G. Limits - MTW 413000 LB, MLW 320000 LB, MZFW 288000 LB		2	
C.G. Limits - MTW 187333 KG, MLW 145149 KG, MZFW 130634 KG		3	
CERTIFIED WEIGHT AND CENTER OF GRAVITY LIMITS	1-02-040	1/9/2009	A
Certified Weight Limits - MTW 401000 LB (181890 KG)		1	
Limitations		1	
Interpolation of Certified Center of Gravity Limits		1	
C.G. Limits - MTW 401000 LB, MLW 304000 LB, MZFW 288000 LB		2	
C.G. Limits - MTW 181890 KG, MLW 137892 KG, MZFW 130634 KG		3	
CERTIFIED WEIGHT AND CENTER OF GRAVITY LIMITS	1-02-050	1/9/2009	C
Certified Weight Limits - MTW 413000 LB (187333 KG)		1	
Limitations		1	
Interpolation of Certified Center of Gravity Limits		1	
C.G. Limits - MTW 413000 LB, MLW 320000 LB, MZFW 288000 LB		2	
C.G. Limits - MTW 187333 KG, MLW 145149 KG, MZFW 130634 KG		3	
CERTIFIED WEIGHT AND CENTER OF GRAVITY LIMITS	1-02-074	11/17/2010	H
Certified Weight Limits - MTW 409000 LB (185519 KG)		1	
Limitations		1	
Interpolation of Certified Center of Gravity Limits		1	
C.G. Limits - MTW 409000 LB, MLW 320000 LB, MZFW 288000 LB		2	
C.G. Limits - MTW 185519 KG, MLW 145149 KG, MZFW 130634 KG		3	
CERTIFIED WEIGHT AND CENTER OF GRAVITY LIMITS	1-02-136	1/9/2009	G
Certified Weight Limits - MTW 413000 LB (187333 KG)		1	
Limitations		1	
Interpolation of Certified Center of Gravity Limits		1	
C.G. Limits - MTW 413000 LB, MLW 304000 LB, MZFW 288000 LB		2	
C.G. Limits - MTW 187333 KG, MLW 137892 KG, MZFW 130634 KG		3	
CERTIFIED WEIGHT AND CENTER OF GRAVITY LIMITS	1-02-137	1/9/2009	B
Certified Weight Limits - MTW 409000 LB (185519 KG)		1	
Limitations		1	
Interpolation of Certified Center of Gravity Limits		1	
C.G. Limits - MTW 409000 LB, MLW 304000 LB, MZFW 288000 LB		2	
C.G. Limits - MTW 185519 KG, MLW 137892 KG, MZFW 130634 KG		3	

APPLICABLE CONFIGURATIONS
All

-BOEING PROPRIETARY-

TABLE OF CONTENTS (Continued)

TITLE	CHP-SEC-SUB	DATE/PAGE	CONFIGURATION
CERTIFIED WEIGHT AND CENTER OF GRAVITY LIMITS	1-02-147	6/17/2009	F
Certified Weight Limits - MTW 409000 LB (185519 KG)		1	
Limitations		1	
Interpolation of Certified Center of Gravity Limits		1	
C.G. Limits - MTW 409000 LB, MLW 320000 LB, MZFW 288000 LB		2	
C.G. Limits - MTW 185519 KG, MLW 145149 KG, MZFW 130634 KG		3	
CERTIFIED WEIGHT AND CENTER OF GRAVITY LIMITS	1-02-156	6/30/2011	E
Certified Weight Limits - MTW 401000 LB (181890 KG)		1	
Limitations		1	
Interpolation of Certified Center of Gravity Limits		1	
C.G. Limits - MTW 401000 LB, MLW 304000 LB, MZFW 288000 LB		2	
C.G. Limits - MTW 181890 KG, MLW 137892 KG, MZFW 130634 KG		3	
TAKEOFF HORIZONTAL STABILIZER TRIM SETTING	1-06-002	8/18/2008	All
English Units Flaps 5, 15 & 20		1	
Metric Units Flaps 5, 15 & 20		2	
Derated Takeoff Trim Setting		3	
LANDING GEAR AND FLAP MOVEMENT BALANCE EFFECT	1-08-001	8/3/1998	All
Landing Gear Retraction Moment		1	
Flaps Retraction Moment		1	
FUEL			
FUEL TANK ARRANGEMENT AND CAPACITIES	1-20-005	11/13/2000	All
Fuel Tank Locations		1	
Maximum Allowable Fuel Weight		2	
Usable Fuel Quantities and Locations		2	
Unusable Fuel Quantities and Locations		3	
FUEL MANAGEMENT	1-22-001	5/27/2005	All
Fuel Loading Procedures		1	
Lateral Fuel Imbalance		1	
Fuel Usage Procedures		2	
APU Fuel Usage		2	
FUEL TANK QUANTITIES AND BALANCE ARMS	1-24-002	1/25/2000	All
Combined Main Tanks 1 and 2 in U.S. Gallons		1	
Combined Main Tanks 1 and 2 in Liters		3	
FUEL TANK QUANTITIES AND BALANCE ARMS	1-24-023	1/25/2000	All
Center Tank in U.S. Gallons		1	
Center Tank in Liters		3	

APPLICABLE CONFIGURATIONS
All

-BOEING PROPRIETARY-

TABLE OF CONTENTS (Continued)

TITLE	CHP-SEC-SUB	DATE/PAGE	CONFIGURATION
FLUIDS			
SYSTEM FLUIDS	1-30-002	11/13/2000	All
Engine System Oil (General Electric CF6-80C Engines)		1	
Integrated Drive Generator		1	
Hydraulic System Fluid		1	
Landing Gear System Fluid		2	
Operating System Fluid		2	
POTABLE WATER SYSTEM	1-32-002	5/19/2005	All
Tank Quantities and Locations		1	
WASTE DISPOSAL SYSTEM	1-34-001	5/27/1999	All
Tank Quantities and Locations		1	
PERSONNEL			
PASSENGER AND PERSONNEL WEIGHT ALLOWANCES	1-40-001	8/23/2007	All
FAA Advisory Circular 120-27E Allowances		1	
INTERIOR ARRANGEMENT - MAIN DECK	1-44-034	1/2/2002	All
Flight Deck		1	
Main Cabin - 36C/187Y Arrangement		2	
GALLEY WEIGHTS - FIXED POSITIONS	1-48-001	10/6/2011	All
Maximum Allowable Galley Weights - MAIN DECK		1	
CARGO			
CARGO COMPARTMENT LOAD LIMITS	1-60-001	7/16/2010	All
Maximum Allowable Weights		1	
Maximum Combined Linear Load Limits		2	
CERTIFIED UNIT LOAD DEVICE WEIGHTS BY POSITION	1-60-202	6/20/2007	All
Unit Load Device Positions - Lower Deck		1	
FORWARD BODY CUMULATIVE LOADS	1-60-401	11/4/2010	All
Cumulative Load Check		1	
Allowable Loads		2	
Sample Cumulative Load Check		5	
AFT BODY CUMULATIVE LOADS	1-60-601	11/4/2010	All
Cumulative Load Check		1	
Allowable Loads		2	
Sample Cumulative Load Check		4	
CARGO COMPARTMENTS	1-62-001	11/16/1998	All
General Location and Arrangement		1	

APPLICABLE CONFIGURATIONS
All

-BOEING PROPRIETARY-

TABLE OF CONTENTS (Continued)

TITLE	CHP-SEC-SUB	DATE/PAGE	CONFIGURATION
FORWARD CARGO COMPARTMENTS	1-62-402	3/26/2012	All
Forward Cargo Compartment Volumes		1	
Forward Cargo Compartment Cross Sections		1	
Cargo Door Dimensions and Allowable Package Sizes		2	
AFT CARGO COMPARTMENTS	1-62-601	3/26/2012	All
Aft Cargo Compartment Volumes		1	
Aft Cargo Compartment Cross Sections		1	
Cargo Door Dimensions and Allowable Package Sizes		2	
BULK CARGO COMPARTMENT	1-62-801	6/20/2007	All
Bulk Cargo Compartment Volume		1	
Bulk Cargo Compartment Cross Sections		1	
Cargo Door Dimensions and Allowable Package Sizes		3	
UNIT LOAD DEVICES - LOWER DECK	1-63-001	8/2/2012	All
Size Codes K, P and Q		1	
Volumes and Center of Gravity Limits		2	
Dimensions and Lateral Positions		3	
UNIT LOAD DEVICES - LOWER DECK	1-63-021	8/2/2012	All
Size Codes A, L and M		1	
Volumes and Center of Gravity Limits		2	
Dimensions and Lateral Positions		3	
FORWARD COMPARTMENT UNIT LOAD DEVICE LOCATIONS	1-64-002	9/16/1999	All
Size Codes K, P & Q		1	
FORWARD COMPARTMENT UNIT LOAD DEVICE LOCATIONS	1-64-201	6/20/2007	All
Size Codes A, L & M		1	
AFT COMPARTMENT UNIT LOAD DEVICE LOCATIONS	1-64-601	6/20/2007	All
Size Codes K, P & Q		1	
FORWARD COMPARTMENT UNIT LOAD DEVICE LOAD LIMITS	1-66-002	9/11/2009	All
Cargo Restraint System - Size Codes K, P & Q		1	
Load Limits - Size Codes K, P & Q		2	
FORWARD COMPARTMENT UNIT LOAD DEVICE LOAD LIMITS	1-66-201	6/20/2007	All
Cargo Restraint System - Size Codes A, L & M		1	
Load Limits - Size Codes A, L & M		1	
AFT COMPARTMENT UNIT LOAD DEVICE LOAD LIMITS	1-66-601	6/20/2007	All
Cargo Restraint System - Size Codes K, P & Q		1	
Load Limits - Size Codes K, P & Q		2	

APPLICABLE CONFIGURATIONS
All

-BOEING PROPRIETARY-

TABLE OF CONTENTS (Continued)

TITLE	CHP-SEC-SUB	DATE/PAGE	CONFIGURATION
CARGO TIEDOWNS - LOWER DECK	1-68-001	3/26/2012	All
General Information		1	
Tiedown Allowables		2	
Tiedown Calculation		4	
Tiedown Example		6	
TIEDOWN FITTING LOCATIONS - FORWARD COMPARTMENTS	1-68-042	9/16/1999	All
Fitting Locations		1	
TIEDOWN FITTING LOCATIONS - AFT COMPARTMENTS	1-68-061	9/16/1999	All
Fitting Locations		1	
TIEDOWN FITTING LOCATIONS - BULK COMPARTMENT	1-68-081	9/16/1999	All
Fitting Locations		1	
CARGO LATERAL IMBALANCE CONTROL	1-69-002	6/22/2012	B, C, D, E, F, G, H
Procedure for Calculation of Imbalance		1	
CARGO LATERAL IMBALANCE LIMITATIONS	1-69-024	12/19/1998	B, C, D, E, F, G, H
Cargo Lateral Imbalance Moment Versus Gross Weight Limitations		1	
GROUND OPERATIONS			
AIRPLANE JACKING	1-80-001	6/22/1999	All
Jack Point Locations		1	
Maximum Allowable Jacking Loads		2	
Limitations Envelopes		3	
MAIN LANDING GEAR JACK POINTS FOR VARIOUS OLEO EXTENSIONS	1-80-081	12/12/2005	All
Jack Point Balance Arms Versus Oleo Extension		1	
AIRPLANE WEIGHING PROCEDURE	1-82-001	10/4/2005	All
General Information		1	
Weighing Facilities and Equipment		1	
Preparation for Airplane Weighing		1	
Weighing Operation		2	
Weighing Procedure Using Platform Scales		3	
Weighing Procedure Using Electronic Load Cells		3	
Non-Level Weighing		5	
TOWING AND TIPPING LIMITATIONS	1-84-001	8/23/2007	All
Towing and Tipping Considerations		1	
Towing and Tipping Limits (English)		2	
Towing and Tipping Limits (Metric)		3	
COMPONENT WEIGHTS AND BALANCE ARMS	1-86-001	3/9/1999	All
Wing Components		1	

APPLICABLE CONFIGURATIONS
All

-BOEING PROPRIETARY-

TABLE OF CONTENTS (Continued)

TITLE	CHP-SEC-SUB	DATE/PAGE	CONFIGURATION
COMPONENT WEIGHTS AND BALANCE ARMS Horizontal Stabilizer Components	1-86-011	1/26/1999 1	All
COMPONENT WEIGHTS AND BALANCE ARMS Vertical Fin Components	1-86-021	1/26/1999 1	All
COMPONENT WEIGHTS AND BALANCE ARMS Body Components	1-86-035	11/12/1998 1	All
COMPONENT WEIGHTS AND BALANCE ARMS Main Gear Components	1-86-041	11/12/1998 1	All
COMPONENT WEIGHTS AND BALANCE ARMS Nose Gear Components	1-86-051	11/12/1998 1	All
COMPONENT WEIGHTS AND BALANCE ARMS Nacelle and Powerplant Components	1-86-063	1/2/2002 1	All
EXAMPLES			
LOADING SCHEDULE DEVELOPMENT Introduction Ordering Instructions	1-90-001	4/17/2007 1 2	All

APPLICABLE CONFIGURATIONS
All

-BOEING PROPRIETARY-

AIRPLANE CONFIGURATION

The engineering data and FAA certification provided by this document are applicable and valid only for the airplane as defined in the Type Design at delivery, and as modified by the incorporation of any Boeing Supplemental Type Certificate (STC) or Service Bulletin. With respect to any third party STC configuration, either pre-delivery or post-delivery, it shall be the responsibility of the buyer to obtain the data and appropriate regulatory agency approval.

CONFIGURATION ASSIGNMENT

The table shown below correlates each airplane serial number to the currently allowed configuration(s) for that airplane. Each configuration is designated by a different letter. Configuration qualifications are listed following the table and indicate the change authorization involved for airplanes with multiple allowable configurations. Because there may be multiple configuration letters applicable to any serial number, and also multiple configuration qualifications listed for any configuration letter, care should be exercised when determining the configuration letter which correctly reflects the applicable configuration of the airplane.

LINE NUMBER	SERIAL NUMBER	VARIABLE NUMBER	CONFIGURATION						
592	26263	VL893	F						
605	27610	VL894	C						
633	27611	VL898	B						
647	27612	VL899	H						
661	27614	VL900	H						
587	27957	VL891	D						
589	27958	VL892	C						
609	27959	VL896	B						
625	27960	VL897	B						
607	28098	VL895	E						
738	28884	VS136	G						
781	30393	VS137	A						

CONFIGURATION QUALIFICATIONS

APPLICABLE CONFIGURATIONS
All

-BOEING PROPRIETARY-

INTERIOR EFFECTIVITY

The tabular data shown below correlates each airplane serial number to the passenger arrangement(s) certified for that airplane. Each passenger arrangement is designated by drawing number and revision letter. To locate a particular passenger arrangement(s), refer to the interior section listed below. Drawing numbers are listed beside each interior drawing in the interior section.

MAIN CABIN

Weight and balance data for each drawing identified in the following table are provided in Section 1-44-034 of this manual.

SERIAL NUMBER	VARIABLE NUMBER	PASSENGER ARRANGEMENT EFFECTIVITY - MAIN CABIN					
		DRAWING #	REV	DRAWING #	REV	DRAWING #	REV
26263	VL893	LOPA-673-398	J				
27610	VL894	LOPA-673-398	J				
27611	VL898	LOPA-673-398	J				
27612	VL899	LOPA-673-398	J				
27614	VL900	LOPA-673-398	J				
27957	VL891	LOPA-673-398	J				
27958	VL892	LOPA-673-398	J				
27959	VL896	LOPA-673-398	J				
27960	VL897	LOPA-673-398	J				
28098	VL895	LOPA-673-398	J				
28884	VS136	LOPA-673-398	J				
30393	VS137	LOPA-673-398	J				

APPLICABLE CONFIGURATIONS
All

-BOEING PROPRIETARY-

GENERAL INFORMATION

WEIGHT AND BALANCE DEFINITIONS

The following definitions are provided to assist operators in having a better understanding of the terms used throughout the Weight and Balance Manual.

General Terms or Acronyms

Balance Arm (B.A.)	A true measure of distance from forward to aft, in inches, from a fixed datum. The fixed datum is selected by the airplane manufacturer. Balance Arms are used in weight and balance calculations. To see the relationship between B.A. and B.S., refer to CHP-SEC-SUB 1-00-04x of this manual.
Body Station (B.S.)	A manufacturing location on the airplane. For first of an airplane model, B.S. are continuous from the front to the aft of the airplane. For later versions that are either stretched (i.e. fuselage inserts added) or shrunk (i.e. fuselage sections removed), B.S. becomes discontinuous, for manufacturing reasons. To see the relationship between B.A. and B.S., refer to CHP-SEC-SUB 1-00-04x of this manual.
Layout of Passenger Arrangement (LOPA)	A Boeing internal drawing that depicts the interior layout.
Layout of Passenger Systems (LOPS)	A Boeing internal drawing that depicts the interior layout.

Weight Terms

Basic Empty Weight (BEW)	Standard Basic Empty Weight plus or minus weight of standard item variations.
Delivery Empty Weight (DEW)	Manufacturer's Empty Weight, less any shortages, plus those standard items and operational items in aircraft at time of delivery.
Fleet Empty Weight (FEW)	Average Basic Empty Weight used for a fleet or group of aircraft of the same model and configuration. (The weight of any fleet member shall not vary more than the tolerance established by government regulations.)
Guaranteed Weight	Weight the manufacturer clearly defines and guarantees, subject to contractual tolerances and adjustments.
Manufacturer's Empty Weight (MEW)	Weight of structure, powerplant, furnishings, systems and other items of equipment that are an integral part of a particular aircraft configuration. (It is essentially a “dry” weight, including only those fluids contained in closed systems.)
Maximum Payload	Maximum Zero Fuel Weight minus Operational Empty Weight.
Operational Empty Weight (OEW)	Basic Empty Weight or Fleet Empty Weight plus operational items.

APPLICABLE CONFIGURATIONS
All

-BOEING PROPRIETARY-

GENERAL INFORMATION (Continued)

Operational Items	Personnel, equipment and supplies necessary for a particular operation but not included in Basic Empty Weight. These items may vary for a particular aircraft and may include, but are not limited to, the following: ❑ Crew and Baggage ❑ Manuals and navigational equipment ❑ Removable service equipment for cabin, galley and bar ❑ Food and beverage, including liquor ❑ Usable fluids other than those in useful load ❑ Life rafts, life vests and emergency transmitters ❑ Aircraft unit load devices
Operational Landing Weight (OLW)	Maximum authorized weight for landing. (It is subject to airport, operational and related restrictions. It must not exceed maximum certified landing weight.)
Operational Takeoff Weight (OTOW)	Maximum authorized weight for takeoff. (It is subject to airport, operational and related restrictions. This is the weight at start of takeoff run and must not exceed maximum certified takeoff weight.)
Payload	Weight of the passengers, cargo and baggage. (These may be revenue and/or nonrevenue.)
Standard Basic Empty Weight (SBEW)	Manufacturer's Empty Weight plus standard items.
Standard Items	Equipment and fluids not considered an integral part of a particular aircraft and not a variation for the same type of aircraft. These items may include, but are not limited to, the following: ❑ Unusable fuel and other unusable fluids ❑ Engine oil ❑ Toilet fluid and chemical ❑ Fire extinguishers, pyrotechnics and emergency oxygen equipment ❑ Structure in galley, buffet and bar ❑ Supplementary electronic equipment
Useful Load	Difference between takeoff weight and Operational Empty Weight. (It includes payload, usable fuel and other usable fluids not included as operational items.)
Zero Fuel Weight	Operational Empty Weight plus payload. (This weight must not exceed Maximum Zero Fuel Weight.)

APPLICABLE CONFIGURATIONS
All

-BOEING PROPRIETARY-

GENERAL INFORMATION (Continued)

Weight Limitation Terms

Maximum Landing Weight (MLW)	Maximum weight for landing as limited by aircraft strength and airworthiness requirements.
Maximum Takeoff Weight (MTOW)	Maximum weight at brake release as limited by aircraft strength and airworthiness requirements.
Maximum Taxi Weight (MTW)	Maximum weight for ground maneuver as limited by aircraft strength and airworthiness requirements. (It includes weight of taxi and runup fuel.)
Maximum Zero Fuel Weight (MZFW)	Maximum weight allowed before usable fuel must be loaded in the aircraft as limited by strength and airworthiness requirements.
Minimum Flight Weight (MFW)	Minimum weight for flight as limited by aircraft strength and airworthiness requirements. The minimum flight weight does not include the weight of gaugeable fuel in the tanks.

Fuel Terms

Unusable Fuel	Fuel remaining after a fuel runout test has been completed in accordance with government regulations. (It includes drainable unusable fuel plus unusable portion of trapped fuel.)
Drainable Unusable Fuel	Unusable fuel minus unusable portion of trapped fuel.
Trapped Unusable Fuel	Unusable fuel remaining when aircraft is defueled by normal means using the procedures and attitudes specified for draining the tanks.
Usable Fuel	Fuel available for aircraft propulsion.
Drainable Usable Fuel	Usable fuel that can be drained from the aircraft by normal means using the procedures and attitudes specified for draining the tanks.
Trapped Usable Fuel	Usable fuel remaining in the fuel feed and engine lines after standard tank defueling.

Curtailments

Cargo Location Variation	Operational margin placed within the certified center of gravity limits to compensate for the effect of reasonable variations in cargo location when partially unrestricted cargo placement is permitted.
Fuel Density Variation	Operational margin placed within the certified center of gravity limits to compensate for the effect of fuel density variation.
Fuel Usage	Operational margin placed within the certified center of gravity limits to compensate for the effect of fuel management during the critical portions of flight.

-BOEING PROPRIETARY-

GENERAL INFORMATION (Continued)

Gear and Flap Movement	Operational margin placed within the certified center of gravity limits to compensate for the effect of extending or retracting landing gear and flaps.
In-flight Movement	Operational margin placed within the certified center of gravity limits to compensate for the effect of reasonable passenger, crew, and cart movement during flight.
Loading Schedule	A hardcopy or computerized form used to record the aircraft's weight, load distribution and other appropriate information; to calculate and check the weight and balance conditions of the aircraft against operational limitations; and to establish the stabilizer trim setting for takeoff.
Operational Empty Weight Variation	Operational margin placed within the certified center of gravity limits to compensate for the known variations in the standard and operational items.
Passenger Seating Variation	Operational margin placed within the certified center of gravity limits to compensate for the effect of reasonable variations in passenger center of gravity when unrestricted seating is permitted.

Balance Terms

Fleet Center-of-Gravity	Average Basic Empty Weight center of gravity used for a fleet or group of aircraft of the same model and configuration. (The center of gravity of any fleet member shall not vary more than the maximum tolerance established by government regulations.)
Cargo Lateral Imbalance Moment (CLIM)	The offset of the airplane center of gravity from the airplane centerline. It is usually expressed as a moment (LB-IN. or KG-IN.) about the airplane centerline.

Cargo Terms and Definitions

Certified ULD	A unit load device that has been manufactured in accordance to and received approval by the appropriate governmental airworthiness authority indicating the airplane ULD meets their safety requirements.
Compartment	A space designated within a Hold.
Container	A rigid structure that performs the function of a ULD without the use of a restraining net.
Hold	A space confined by ceiling, floor, walls, bulkhead and/or designated net used for carrying load.
Igloo	A bottomless rigid shell made of fiberglass, metal or other suitable material. Its shape conforms to the contours of cargo aircraft envelopes. It covers the maximum usable area of an aircraft pallet to which it is secured during flight.

APPLICABLE CONFIGURATIONS
All

-BOEING PROPRIETARY-

GENERAL INFORMATION (Continued)

NAS 3610	A document which defines test conditions for approval of ULDs per TSO-C90c.
Non-Certified ULD	A unit load device that has not received approval by the appropriate governmental airworthiness authority indicating the airplane ULD meets their safety requirements.
Pallet	An item of equipment consisting of a flat platform with a flat under-surface of standard dimensions on which goods are assembled and secured before being loaded as a unit onto the airplane.
Tiedown Fitting	An attachment device designed to transfer forces between a load bearing device (typically a net, strap, rope or bar) and a cargo track.
TSO-C90c	Technical Standard Order for the approval of ULDs. NAS 3610 is the minimum performance standard.
ULD	Unit Load Device. An assembly of components comprising either of the following: aircraft pallet and pallet net, straps, igloo aircraft container The purpose of the unit load device is to enable individual pieces of cargo to be assembled into a standardized sized unit to facilitate rapid loading/unloading onto aircraft having compatible handling and restraint systems which interface directly with the unit.
ULD Position	A volume in the cargo compartment which is designated and equipped to be occupied, during flight, by a ULD of specified type.

ABBREVIATIONS

The following terms, when necessary, will be abbreviated as shown below.

UNIT	ABBREVIATION	UNIT	ABBREVIATION
Pounds	LB	Inches	IN.
Kilograms	KG	Feet	FT
U. S. Gallons	U.S. GAL.	Square Feet	SQ FT
Liters	L	Cubic Feet	CU FT
Number	NO.	Inboard	INBD
Forward	FWD	Outboard	OUTBD
Balance Arm	B.A.	Mean Aerodynamic Chord	MAC
Body Buttock Line	B.B.L.	Leading Edge of the MAC	LEMAC
Water Line	W.L.	Center of Gravity	C.G.

-BOEING PROPRIETARY-

GENERAL INFORMATION (Continued)

CONVERSION FACTORS

The data in this manual is provided in both English and Metric units. Unless otherwise stated, the conversions listed below are used throughout this manual.

MULTIPLY	BY	TO OBTAIN
Pounds	0.45359237	Kilograms
U. S. Gallons	3.78541180	Liters
Inches	2.54000000	Centimeters
Feet	0.30480000	Meters

When totals or summations are required the English values are summed separately from the metric values. Differences may occur when comparing the English totals with the metric totals due to round off.

All metric values are converted from English values. When using the conversion factors in this manual, all resultants will be rounded except when the value is a weight limitation. For minimum or maximum weight limitations the resultant metric values will be rounded up or truncated, whichever is more conservative.

APPLICABLE CONFIGURATIONS
All

-BOEING PROPRIETARY-

AIRPLANE DIMENSIONS

GENERAL ARRANGEMENT AND PRIMARY DIMENSIONS

The following figure shows the 767-300 general arrangement and primary dimensions for a configuration with 3 exit doors, 1 aft of wing type I exit, and a large forward cargo door.

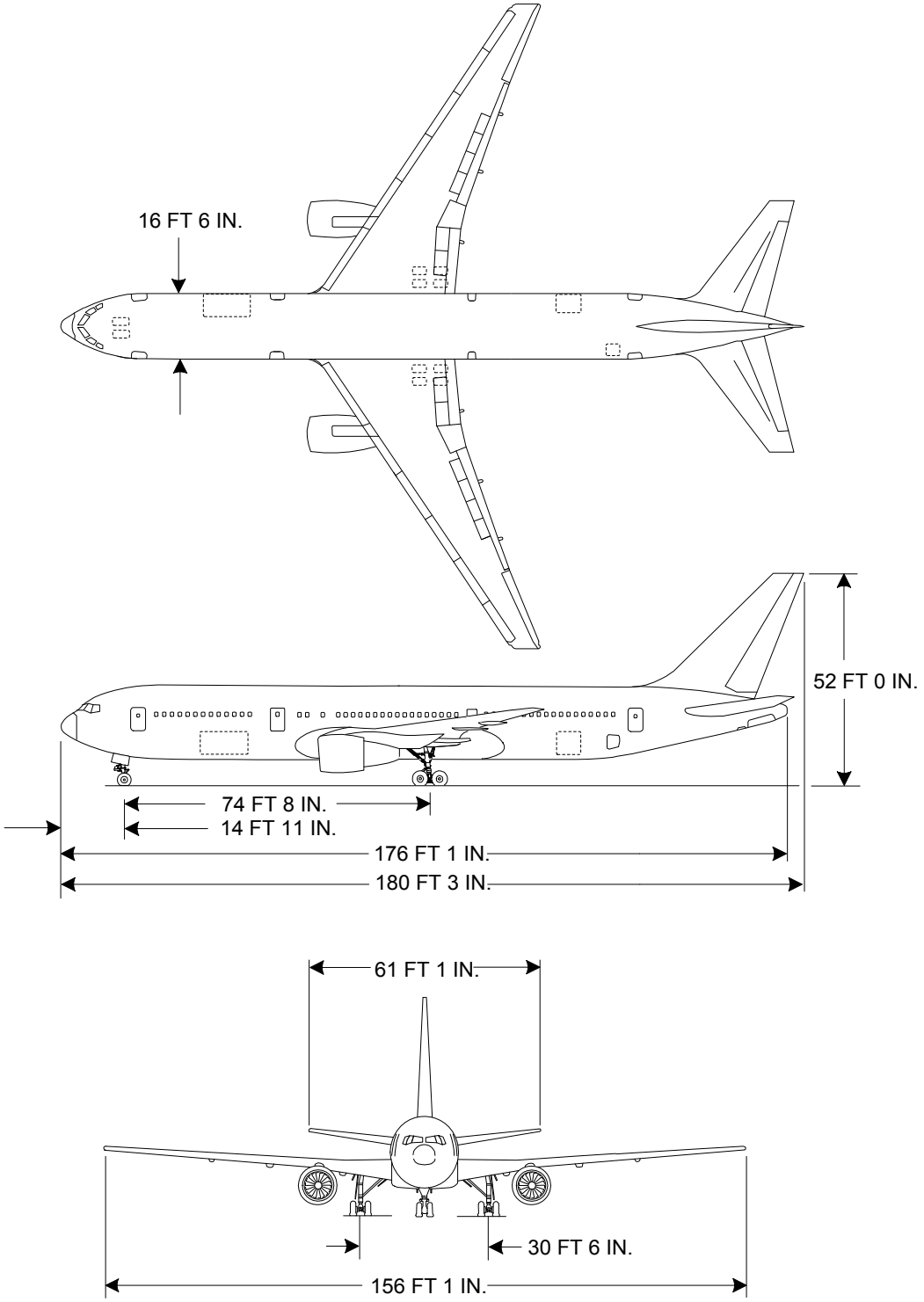

APPLICABLE CONFIGURATIONS
All

-BOEING PROPRIETARY-

BALANCE REFERENCE SYSTEM

BALANCE ARMS / BODY STATIONS

Longitudinal location of all airplane component centers of gravity identified throughout this manual will be referred to as Balance Arms. The Balance Arm is a true measure in inches from the reference datum 28.5 IN. aft of the airplane nose. Balance Arms are not always equivalent to Body Stations (B.S.) on the 767-300. The relationship between B.A. and B.S. is shown below.

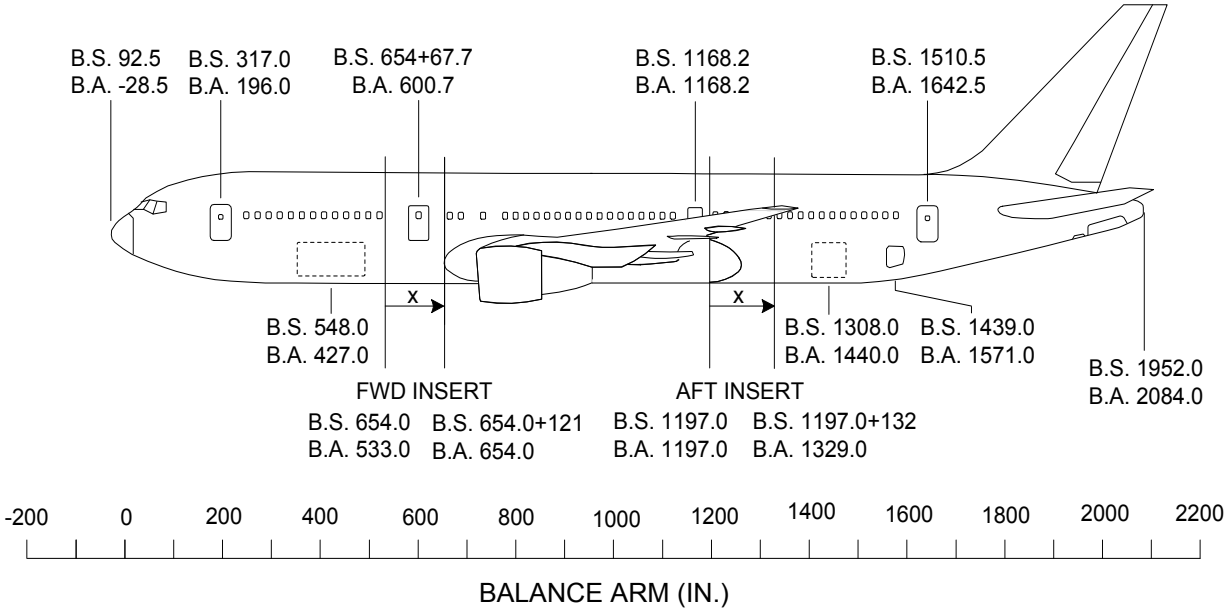

The following table provides Body Station to Balance Arm conversion data.

BODY STATION - IN.	ADJUSTMENT - IN.	BALANCE ARM - IN.
92.5 to 654	-121	-28.5 to 533
Fwd Body Insert	B.A. 533 + X	533 to 654
654+121 to 1197	0	654 to 1197
Aft Body Insert	B.A. 1197 + X	1197 to 1329
1197+132 to 1952	+132	1329 to 2084

APPLICABLE CONFIGURATIONS
All

-BOEING PROPRIETARY-

BALANCE REFERENCE SYSTEM (Continued)

MEAN AERODYNAMIC CHORD

The Mean Aerodynamic Chord, as used in this manual, is a wing reference distance with a length of 237.5 IN. The Leading Edge of the Mean Aerodynamic Chord is at Balance Arm 913.2 IN. Conversion of the airplane center of gravity from Balance Arm, in inches, to a percentage of Mean Aerodynamic Chord is derived using the following formula:

$$\%MAC = \frac{B.A. - 913.2}{237.5} \times 100$$

The reverse conversion of the airplane center of gravity from a percentage of Mean Aerodynamic Chord to Balance Arm, in inches, is derived using the following formula:

$$B.A. = \frac{(\%MAC \times 237.5)}{100} + 913.2$$

BODY BUTTOCK LINE

The Body Buttock Line is a vertical line or a vertical plane parallel to the centerline of the airplane used to locate points or planes to the left or right of the airplane centerline.

WATER LINE

The Water Line is a horizontal reference line or a horizontal plane parallel to the main deck floor used to locate points or planes vertically. The Water Line is measured from the reference datum 200.0 IN. below the top of the main deck floor.

APPLICABLE CONFIGURATIONS
All

-BOEING PROPRIETARY-

FACTORS AFFECTING PERFORMANCE AND OPERATIONAL LIMITATIONS

INTERPOLATION OF CERTIFIED CENTER OF GRAVITY LIMITS

CHP-SEC 1-02-xxx presents the certified weight and center of gravity limits by identifying inflection points (end points) for each limit in terms of weight and %MAC. Intermediate points between the inflection points must be determined by interpolating the weight and moment, not the weight and %MAC. The moment is calculated for any given weight and %MAC by using the following formula:

$$\text{Moment} = \text{Weight} \times \left[\frac{(237.5 \times \%\text{MAC})}{100.0} + 913.2 \right]$$

Weight versus moment grids can be presented in various ways. The Loading Schedule Substantiation documents referenced in CHP-SEC 1-90-00x typically show weight and center of gravity limits converted to a weight versus index. The index values on these grids are an alternate way of displaying moment and are calculated using an index equation. Interpolating intermediate points using weight and index is equivalent to weight and moment.

OPERATIONAL WEIGHT AND CENTER OF GRAVITY REQUIREMENTS

To comply with the performance and operational limitations of the Federal Aviation Regulations, the allowable takeoff weight and the landing weight may be restricted to less than the Maximum Takeoff Weight and the Maximum Landing Weight respectively. The Operational Takeoff Weight may be limited by the most restrictive of the following requirements:

- Operational Takeoff Weight for altitude and temperature
- Takeoff field length requirements
- Tire speed and brake energy limits
- Tire pressure
- Obstacle clearance, enroute and landing requirements
- Noise requirements
- Cargo Lateral Imbalance

The Operational Landing Weight may be limited by the most restrictive of the following requirements:

- Landing field length requirements
- Maximum approach and landing climb weight for altitude and temperature
- Noise requirements

These may not be all of the limitations; see the Airplane Flight Manual for further information.

To ensure that the airplane center of gravity remains within the center of gravity limits, airplane balance must be accounted for with all load conditions during all taxi, takeoff, flight and landing operations. Appropriate constraints must be established and applied to the center of gravity limits as required to account for such changes in the airplane balance condition as due to:

- Cargo location variation
- Fuel density variation
- Fuel usage
- Gear and flap movement
- In-flight movement
- Passenger seating variation

The data in the remainder of this manual will allow the operator to develop these constraints. For guidance in accunting for these items, refer to Advisory Circular 120-27E.

APPLICABLE CONFIGURATIONS
All

-BOEING PROPRIETARY-

FACTORS AFFECTING PERFORMANCE AND OPERATIONAL LIMITATIONS

COMMONWEALTH OF INDEPENDENT STATES (CIS) REQUIREMENTS

Airplanes operating under the regulatory agency of the Commonwealth of Independent States (CIS) are required to be in compliance with NLGS-3 (comparable to FAR Part 25). Aviation Register (AR) Specialists identified changes to some Boeing procedural documents that would be necessary to be in compliance with NLGS-3 and operate in the CIS.

Continuous Cold Weather Operations

Boeing document number D6-81416-6, “The Aviation Register Requirements for Operation in the Commonwealth of Independent States”, defines a procedure for airplanes operating continuously in cold weather (i.e. ground temperatures below the freezing point). When these conditions exist, ice builds up in the interior of the airplane. The Maintenance Manual Section of document D6-81416-6 defines the prescribed maximum flight hours before removal of interior ice is required.

APPLICABLE CONFIGURATIONS
All

-BOEING PROPRIETARY-

CERTIFIED WEIGHT AND CENTER OF GRAVITY LIMITS

CERTIFIED WEIGHT LIMITS - MTW 413000 LB (187333 KG)

The Maximum Certified Gross Weights and Center of Gravity Limits are shown graphically on pages 2 & 3. These Center of Gravity Limits are for taxi, takeoff, flight and landing unless otherwise specified, and are the absolute limits which must not be exceeded by the airplane center of gravity in any taxi, takeoff, flight, or landing configuration.

CERTIFIED GROSS WEIGHTS			
		LB	KG
Maximum Taxi Weight	(MTW)	413000	187333
Maximum Takeoff Weight	(MTOW)	412000	186880
Maximum Landing Weight	(MLW)	320000	145149
Maximum Zero Fuel Weight	(MZFW)	288000	130634
Minimum Flight Weight	(MFW)	179000	81193

LIMITATIONS

The following limitations must be met in order to use the certified gross weight and center of gravity limits:

- Minimum Tire Size Required
  - Nose Gear - H37X14-15/22 Ply Rating
  - Main Gear - H46X18-20/32 Ply Rating
- See CHP-SEC-SUB 1-69-024 for cargo lateral imbalance limitations.
- Refer to the Airplane Maintenance Manual Section 12-15-03 for minimum tire pressure requirements.

INTERPOLATION OF CERTIFIED CENTER OF GRAVITY LIMITS

The certified weight and center of gravity limits shown in this section identify the inflection points (end points) for each weight in terms of weight and % MAC. Intermediate points between the inflection points must be determined by interpolating the weight and moment. The method of interpolation is presented in CHP-SEC 1-02-00x.

APPLICABLE CONFIGURATIONS
D

-BOEING PROPRIETARY-

CERTIFIED WEIGHT AND CENTER OF GRAVITY LIMITS (Continued)

C.G. LIMITS - MTW 413000 LB, MLW 320000 LB, MZFW 288000 LB

The following diagram represents the certified Center of Gravity Limits in English units:

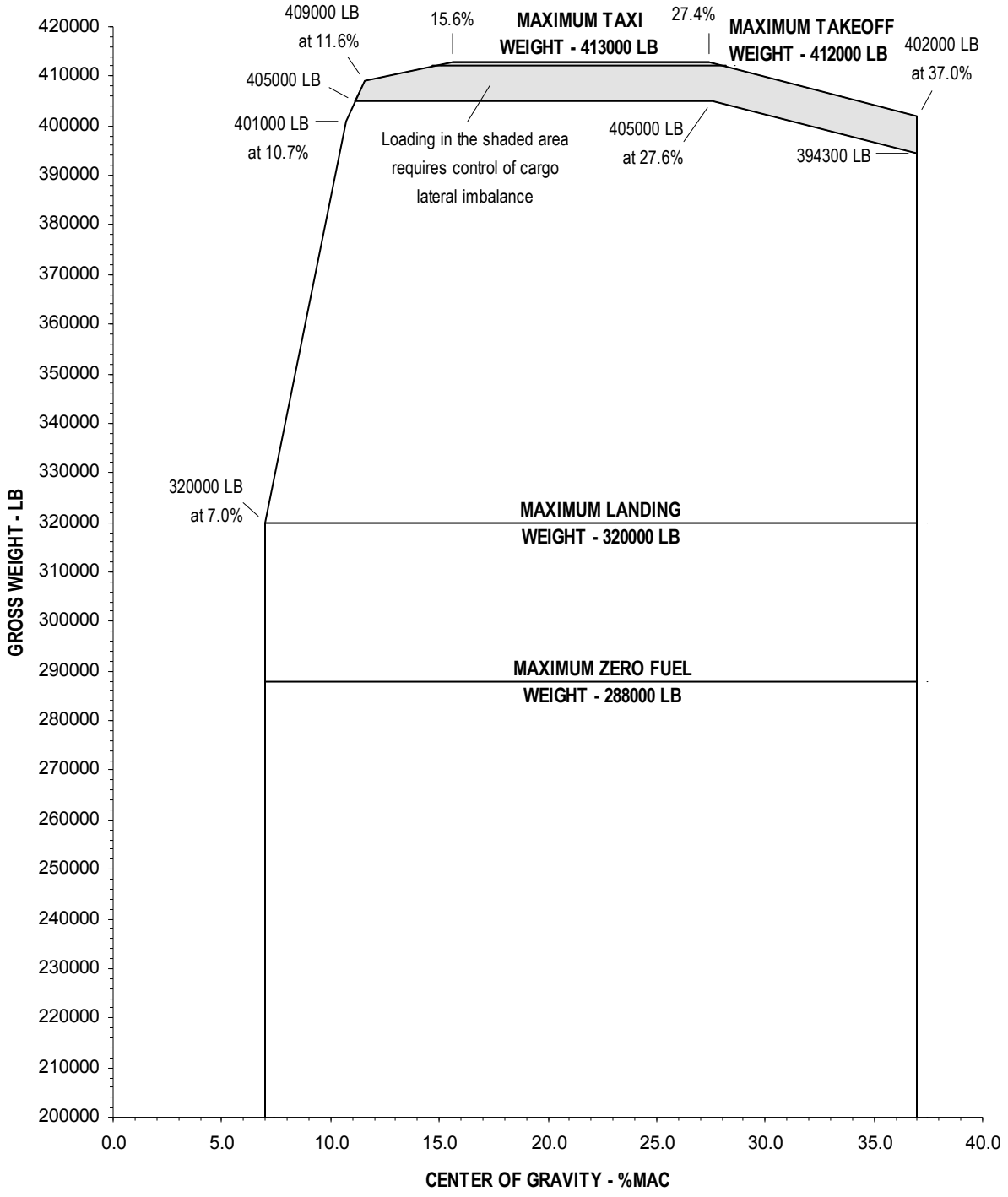

WARNING REFER TO PAGE 1 OF THIS SUBJECT FOR LIMITATIONS TO THE C.G. LIMITS.

APPLICABLE CONFIGURATIONS
D

-BOEING PROPRIETARY-

CERTIFIED WEIGHT AND CENTER OF GRAVITY LIMITS (Continued)

C.G. LIMITS - MTW 187333 KG, MLW 145149 KG, MZFW 130634 KG

The following diagram represents the certified Center of Gravity Limits in Metric units:

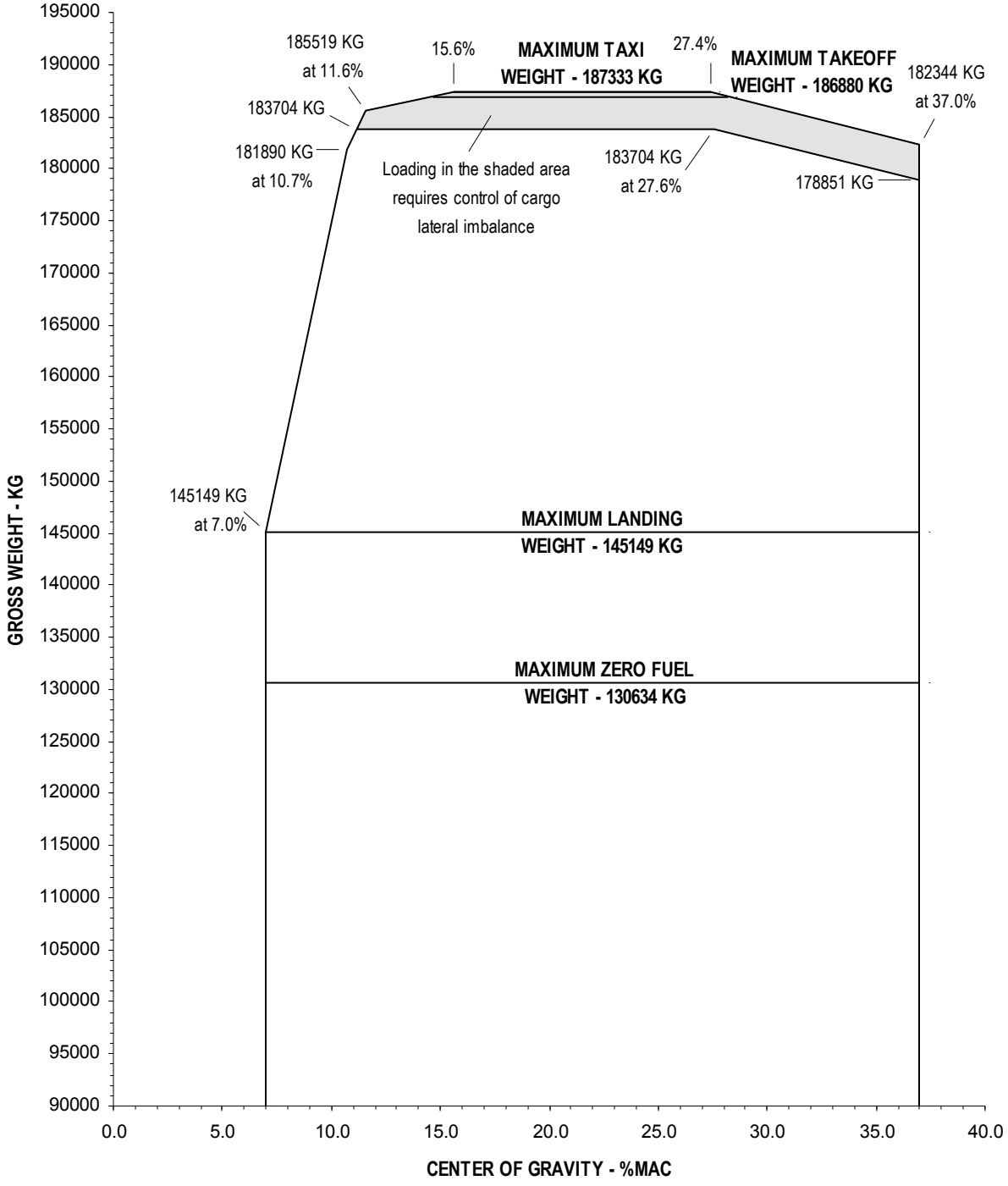

WARNING REFER TO PAGE 1 OF THIS SUBJECT FOR LIMITATIONS TO THE C.G. LIMITS.

APPLICABLE CONFIGURATIONS
D

-BOEING PROPRIETARY-

CERTIFIED WEIGHT AND CENTER OF GRAVITY LIMITS

CERTIFIED WEIGHT LIMITS - MTW 401000 LB (181890 KG)

The Maximum Certified Gross Weights and Center of Gravity Limits are shown graphically on pages 2 & 3. These Center of Gravity Limits are for taxi, takeoff, flight and landing unless otherwise specified, and are the absolute limits which must not be exceeded by the airplane center of gravity in any taxi, takeoff, flight, or landing configuration.

CERTIFIED GROSS WEIGHTS			
		LB	KG
Maximum Taxi Weight	(MTW)	401000	181890
Maximum Takeoff Weight	(MTOW)	400000	181436
Maximum Landing Weight	(MLW)	304000	137892
Maximum Zero Fuel Weight	(MZFW)	288000	130634
Minimum Flight Weight	(MFW)	179000	81193

LIMITATIONS

The following limitations must be met in order to use the certified gross weight and center of gravity limits:

- Minimum Tire Size Required
  - Nose Gear - H37X14-15/22 Ply Rating
  - Main Gear - H46X18-20/32 Ply Rating
- Refer to the Airplane Maintenance Manual Section 12-15-03 for minimum tire pressure requirements.

INTERPOLATION OF CERTIFIED CENTER OF GRAVITY LIMITS

The certified weight and center of gravity limits shown in this section identify the inflection points (end points) for each weight in terms of weight and % MAC. Intermediate points between the inflection points must be determined by interpolating the weight and moment. The method of interpolation is presented in CHP-SEC 1-02-00x.

APPLICABLE CONFIGURATIONS
A

-BOEING PROPRIETARY-

CERTIFIED WEIGHT AND CENTER OF GRAVITY LIMITS (Continued)

C.G. LIMITS - MTW 401000 LB, MLW 304000 LB, MZFW 288000 LB

The following diagram represents the certified Center of Gravity Limits in English units:

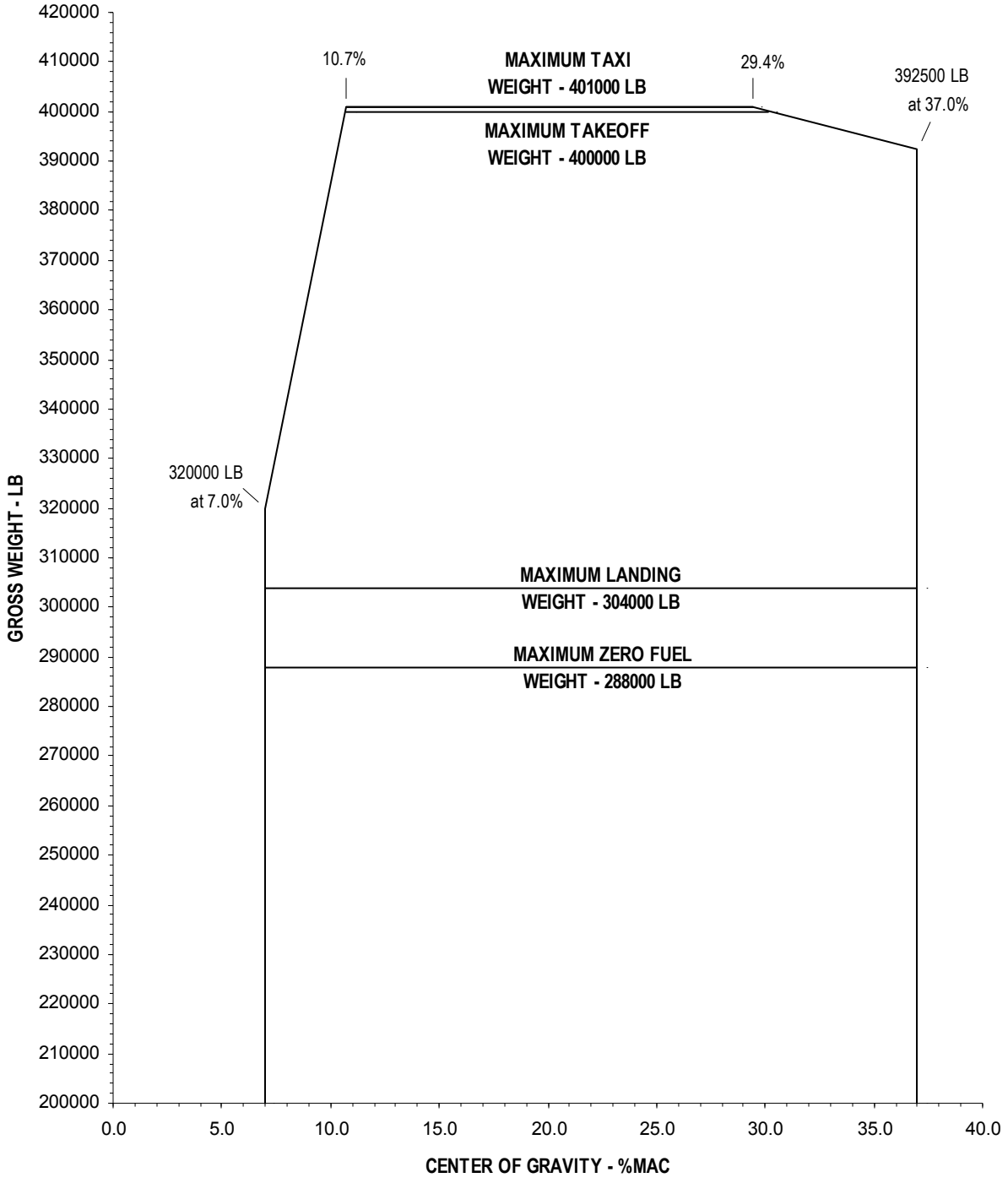

WARNING REFER TO PAGE 1 OF THIS SUBJECT FOR LIMITATIONS TO THE C.G. LIMITS.

APPLICABLE CONFIGURATIONS
A

-BOEING PROPRIETARY-

CERTIFIED WEIGHT AND CENTER OF GRAVITY LIMITS (Continued)

C.G. LIMITS - MTW 181890 KG, MLW 137892 KG, MZFW 130634 KG

The following diagram represents the certified Center of Gravity Limits in Metric units:

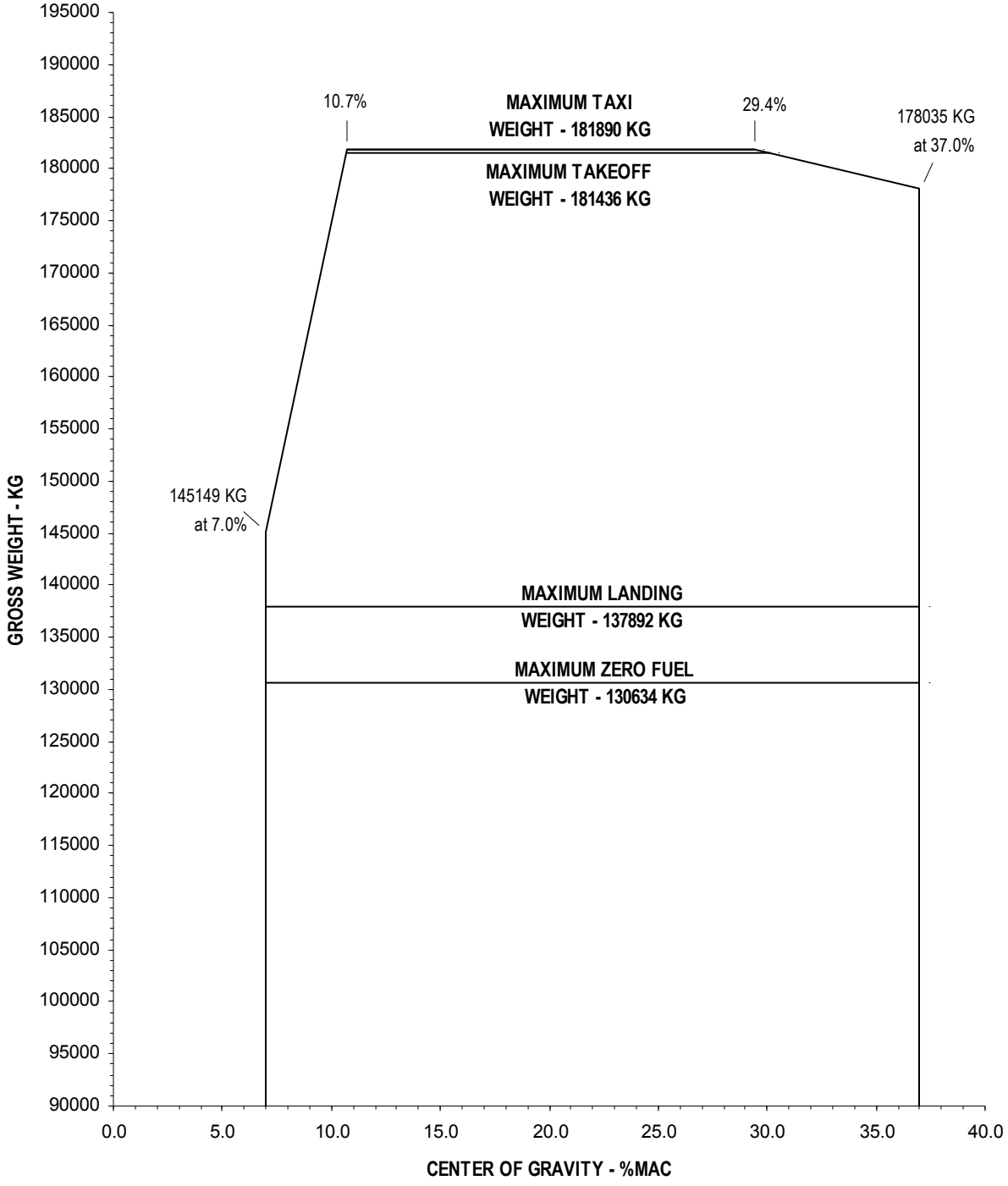

WARNING REFER TO PAGE 1 OF THIS SUBJECT FOR LIMITATIONS TO THE C.G. LIMITS.

APPLICABLE CONFIGURATIONS
A

-BOEING PROPRIETARY-

CERTIFIED WEIGHT AND CENTER OF GRAVITY LIMITS

CERTIFIED WEIGHT LIMITS - MTW 413000 LB (187333 KG)

The Maximum Certified Gross Weights and Center of Gravity Limits are shown graphically on pages 2 & 3. These Center of Gravity Limits are for taxi, takeoff, flight and landing unless otherwise specified, and are the absolute limits which must not be exceeded by the airplane center of gravity in any taxi, takeoff, flight, or landing configuration.

CERTIFIED GROSS WEIGHTS			
		LB	KG
Maximum Taxi Weight	(MTW)	413000	187333
Maximum Takeoff Weight	(MTOW)	412000	186880
Maximum Landing Weight	(MLW)	320000	145149
Maximum Zero Fuel Weight	(MZFW)	288000	130634
Minimum Flight Weight	(MFW)	179000	81193

LIMITATIONS

The following limitations must be met in order to use the certified gross weight and center of gravity limits:

- Minimum Tire Size Required
  - Nose Gear - H37X14-15/22 Ply Rating
  - Main Gear - H46X18-20/32 Ply Rating
- See CHP-SEC-SUB 1-69-024 for cargo lateral imbalance limitations.
- Refer to the Airplane Flight Manual “Operation with Alternate Forward Center of Gravity Limit for Takeoff” Appendix for use of Alternate Forward C. G. Limits.
- Refer to the Airplane Maintenance Manual Section 12-15-03 for minimum tire pressure requirements.

INTERPOLATION OF CERTIFIED CENTER OF GRAVITY LIMITS

The certified weight and center of gravity limits shown in this section identify the inflection points (end points) for each weight in terms of weight and % MAC. Intermediate points between the inflection points must be determined by interpolating the weight and moment. The method of interpolation is presented in CHP-SEC 1-02-00x.

APPLICABLE CONFIGURATIONS
C

-BOEING PROPRIETARY-

CERTIFIED WEIGHT AND CENTER OF GRAVITY LIMITS (Continued)

C.G. LIMITS - MTW 413000 LB, MLW 320000 LB, MZFW 288000 LB

The following diagram represents the certified Center of Gravity Limits in English units:

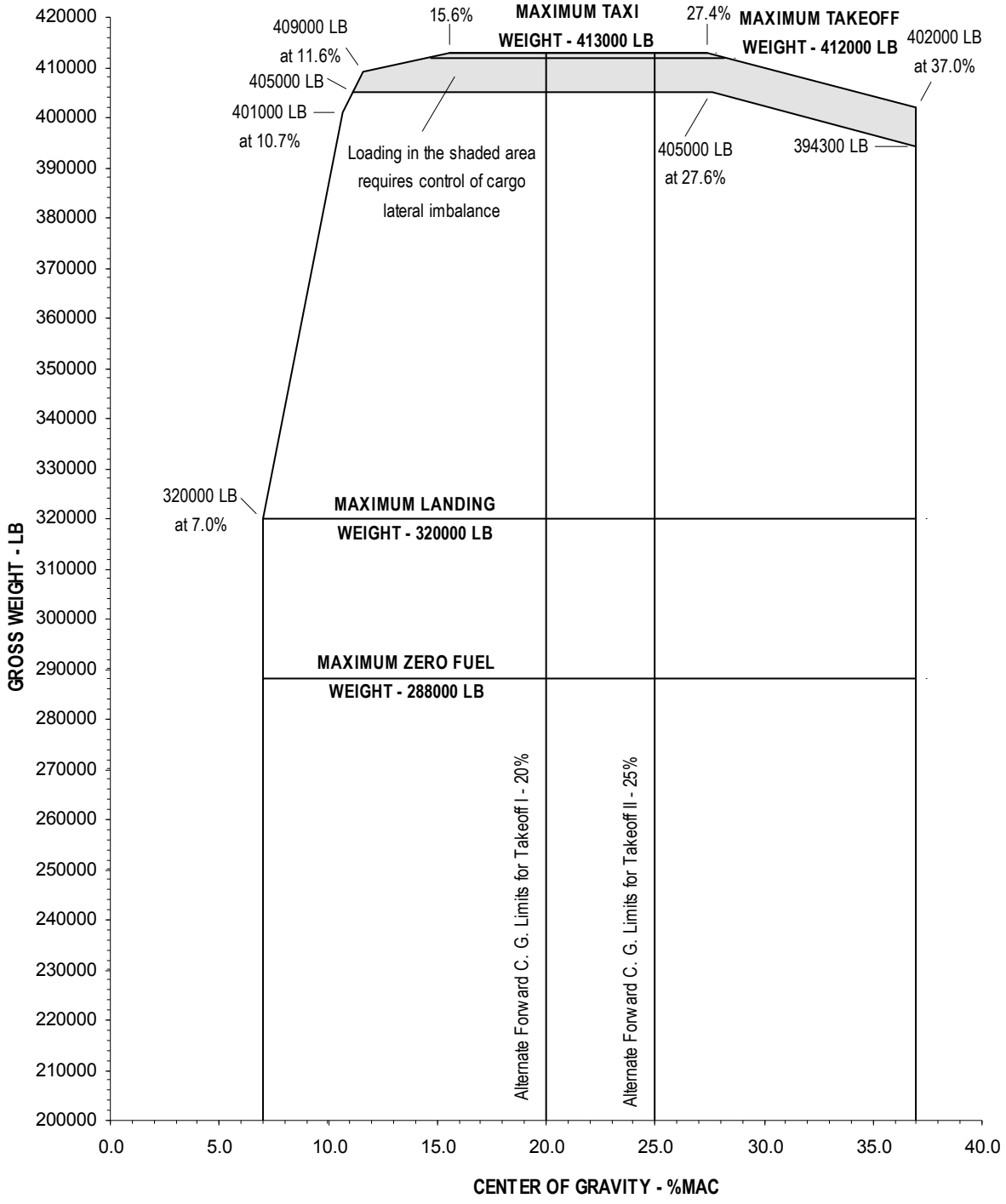

WARNING REFER TO PAGE 1 OF THIS SUBJECT FOR LIMITATIONS TO THE C.G. LIMITS.

APPLICABLE CONFIGURATIONS
C

-BOEING PROPRIETARY-

CERTIFIED WEIGHT AND CENTER OF GRAVITY LIMITS (Continued)

C.G. LIMITS - MTW 187333 KG, MLW 145149 KG, MZFW 130634 KG

The following diagram represents the certified Center of Gravity Limits in Metric units:

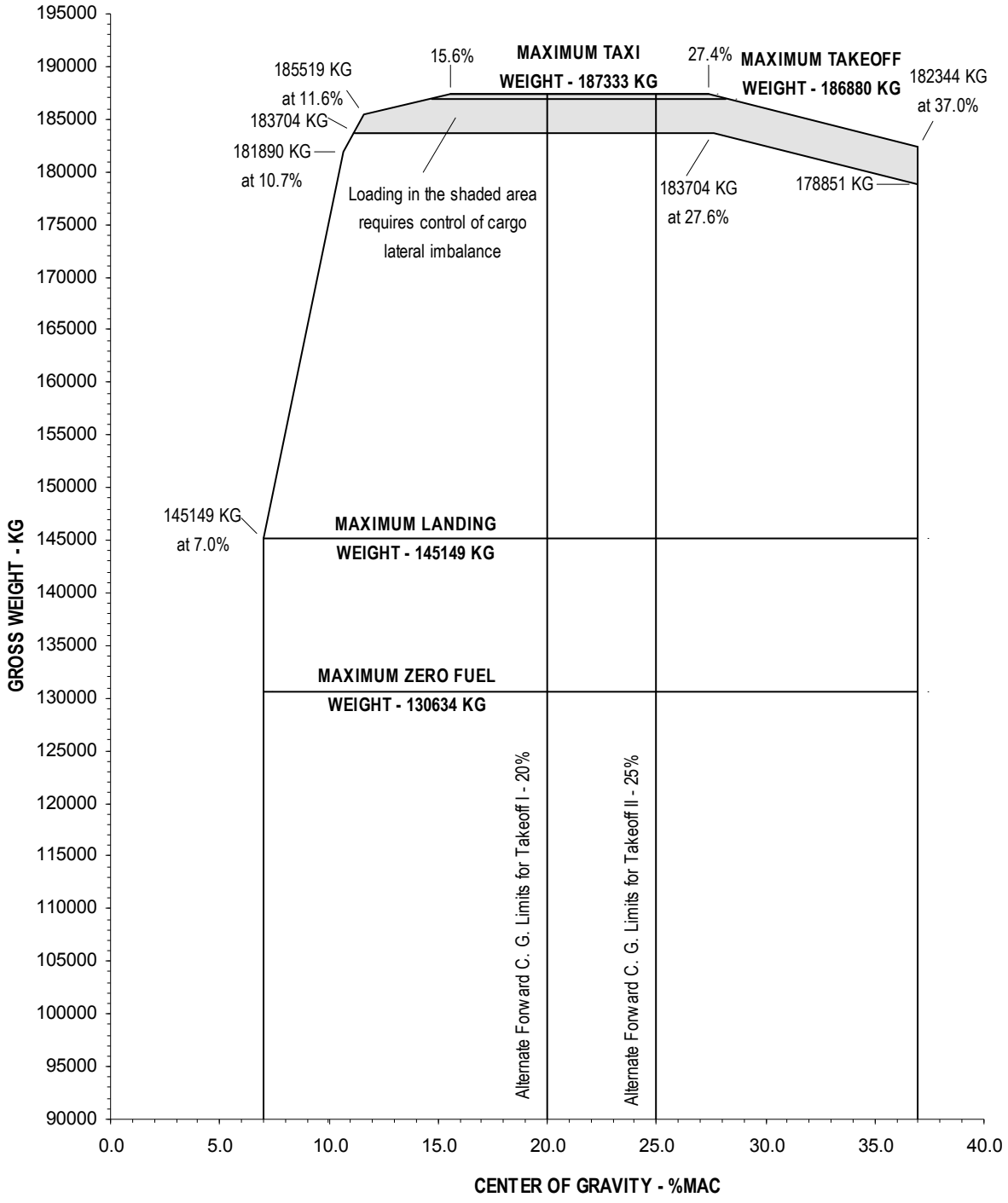

WARNING REFER TO PAGE 1 OF THIS SUBJECT FOR LIMITATIONS TO THE C.G. LIMITS.

APPLICABLE CONFIGURATIONS
C

-BOEING PROPRIETARY-

CERTIFIED WEIGHT AND CENTER OF GRAVITY LIMITS

CERTIFIED WEIGHT LIMITS - MTW 409000 LB (185519 KG)

The Maximum Certified Gross Weights and Center of Gravity Limits are shown graphically on pages 2 & 3. These Center of Gravity Limits are for taxi, takeoff, flight and landing unless otherwise specified, and are the absolute limits which must not be exceeded by the airplane center of gravity in any taxi, takeoff, flight, or landing configuration.

CERTIFIED GROSS WEIGHTS			
		LB	KG
Maximum Taxi Weight	(MTW)	409000	185519
Maximum Takeoff Weight	(MTOW)	407000	184612
Maximum Landing Weight	(MLW)	320000	145149
Maximum Zero Fuel Weight	(MZFW)	288000	130634
Minimum Flight Weight	(MFW)	179000	81193

LIMITATIONS

The following limitations must be met in order to use the certified gross weight and center of gravity limits:

- Minimum Tire Size Required
  - Nose Gear - H37X14-15/22 Ply Rating
  - Main Gear - H46X18-20/32 Ply Rating
- See CHP-SEC-SUB 1-69-024 for cargo lateral imbalance limitations.
- Refer to the Airplane Maintenance Manual Section 12-15-03 for minimum tire pressure requirements.

INTERPOLATION OF CERTIFIED CENTER OF GRAVITY LIMITS

The certified weight and center of gravity limits shown in this section identify the inflection points (end points) for each weight in terms of weight and % MAC. Intermediate points between the inflection points must be determined by interpolating the weight and moment. The method of interpolation is presented in CHP-SEC 1-02-00x.

APPLICABLE CONFIGURATIONS
H

-BOEING PROPRIETARY-

CERTIFIED WEIGHT AND CENTER OF GRAVITY LIMITS (Continued)

C.G. LIMITS - MTW 409000 LB, MLW 320000 LB, MZFW 288000 LB

The following diagram represents the certified Center of Gravity Limits in English units:

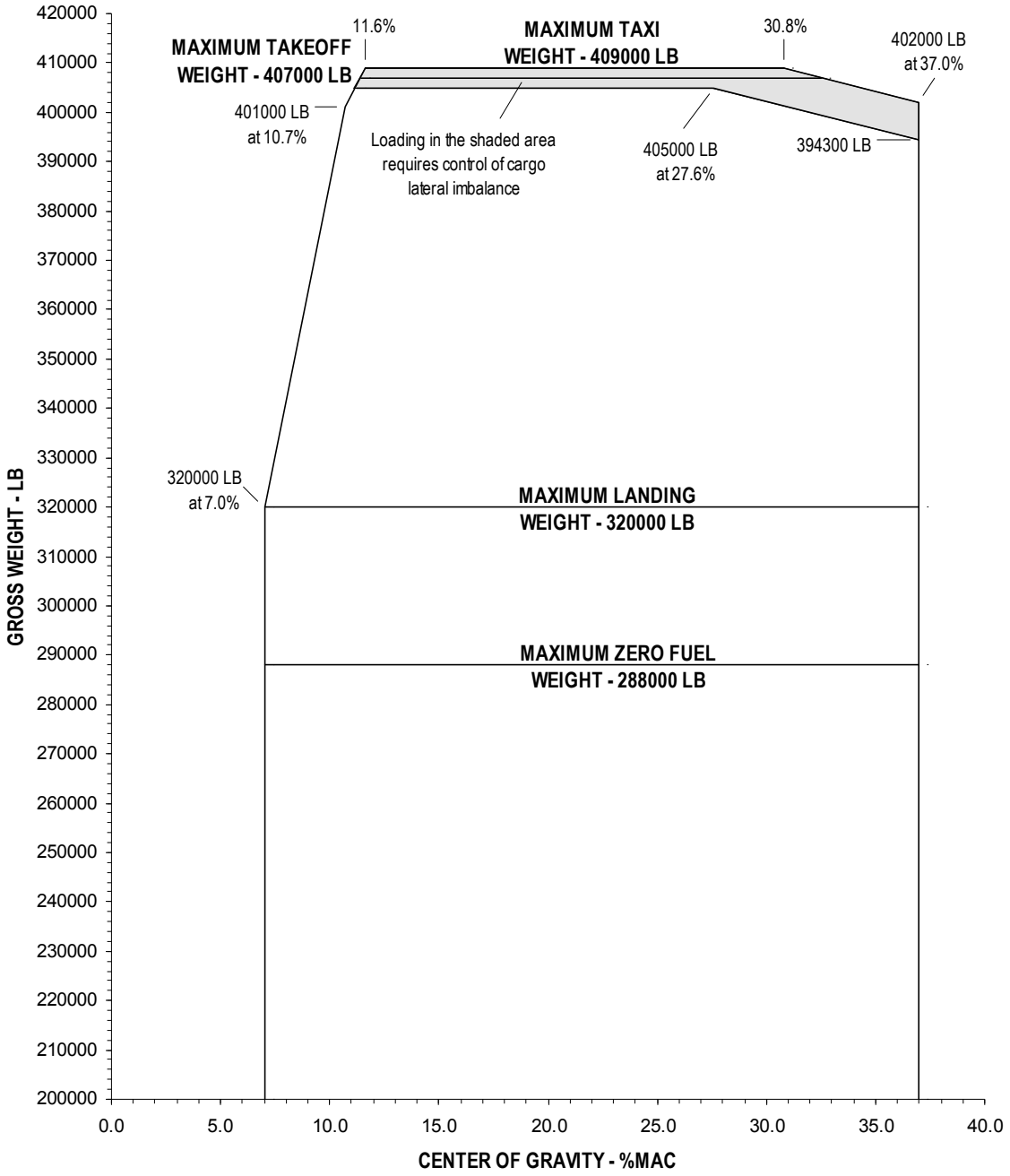

WARNING REFER TO PAGE 1 OF THIS SUBJECT FOR LIMITATIONS TO THE C.G. LIMITS.

APPLICABLE CONFIGURATIONS
H

-BOEING PROPRIETARY-

CERTIFIED WEIGHT AND CENTER OF GRAVITY LIMITS (Continued)

C.G. LIMITS - MTW 185519 KG, MLW 145149 KG, MZFW 130634 KG

The following diagram represents the certified Center of Gravity Limits in Metric units:

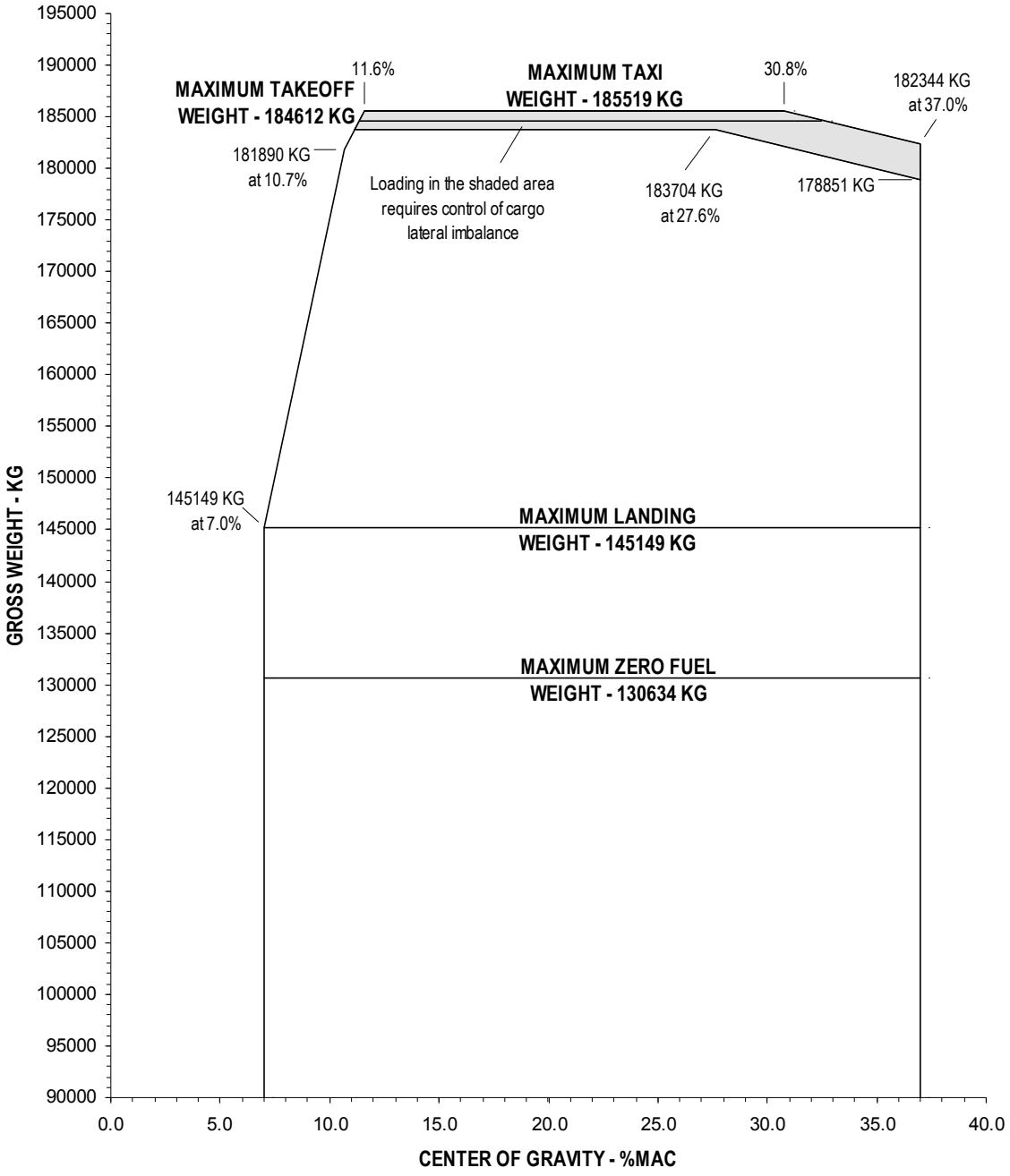

WARNING REFER TO PAGE 1 OF THIS SUBJECT FOR LIMITATIONS TO THE C.G. LIMITS.

APPLICABLE CONFIGURATIONS
H

-BOEING PROPRIETARY-

CERTIFIED WEIGHT AND CENTER OF GRAVITY LIMITS

CERTIFIED WEIGHT LIMITS - MTW 413000 LB (187333 KG)

The Maximum Certified Gross Weights and Center of Gravity Limits are shown graphically on pages 2 & 3. These Center of Gravity Limits are for taxi, takeoff, flight and landing unless otherwise specified, and are the absolute limits which must not be exceeded by the airplane center of gravity in any taxi, takeoff, flight, or landing configuration.

CERTIFIED GROSS WEIGHTS			
		LB	KG
Maximum Taxi Weight	(MTW)	413000	187333
Maximum Takeoff Weight	(MTOW)	412000	186880
Maximum Landing Weight	(MLW)	304000	137892
Maximum Zero Fuel Weight	(MZFW)	288000	130634
Minimum Flight Weight	(MFW)	179000	81193

LIMITATIONS

The following limitations must be met in order to use the certified gross weight and center of gravity limits:

- Minimum Tire Size Required
  - Nose Gear - H37X14-15/22 Ply Rating
  - Main Gear - H46X18-20/32 Ply Rating
- See CHP-SEC-SUB 1-69-024 for cargo lateral imbalance limitations.
- Refer to the Airplane Maintenance Manual Section 12-15-03 for minimum tire pressure requirements.

INTERPOLATION OF CERTIFIED CENTER OF GRAVITY LIMITS

The certified weight and center of gravity limits shown in this section identify the inflection points (end points) for each weight in terms of weight and % MAC. Intermediate points between the inflection points must be determined by interpolating the weight and moment. The method of interpolation is presented in CHP-SEC 1-02-00x.

APPLICABLE CONFIGURATIONS
G

-BOEING PROPRIETARY-

CERTIFIED WEIGHT AND CENTER OF GRAVITY LIMITS (Continued)

C.G. LIMITS - MTW 413000 LB, MLW 304000 LB, MZFW 288000 LB

The following diagram represents the certified Center of Gravity Limits in English units:

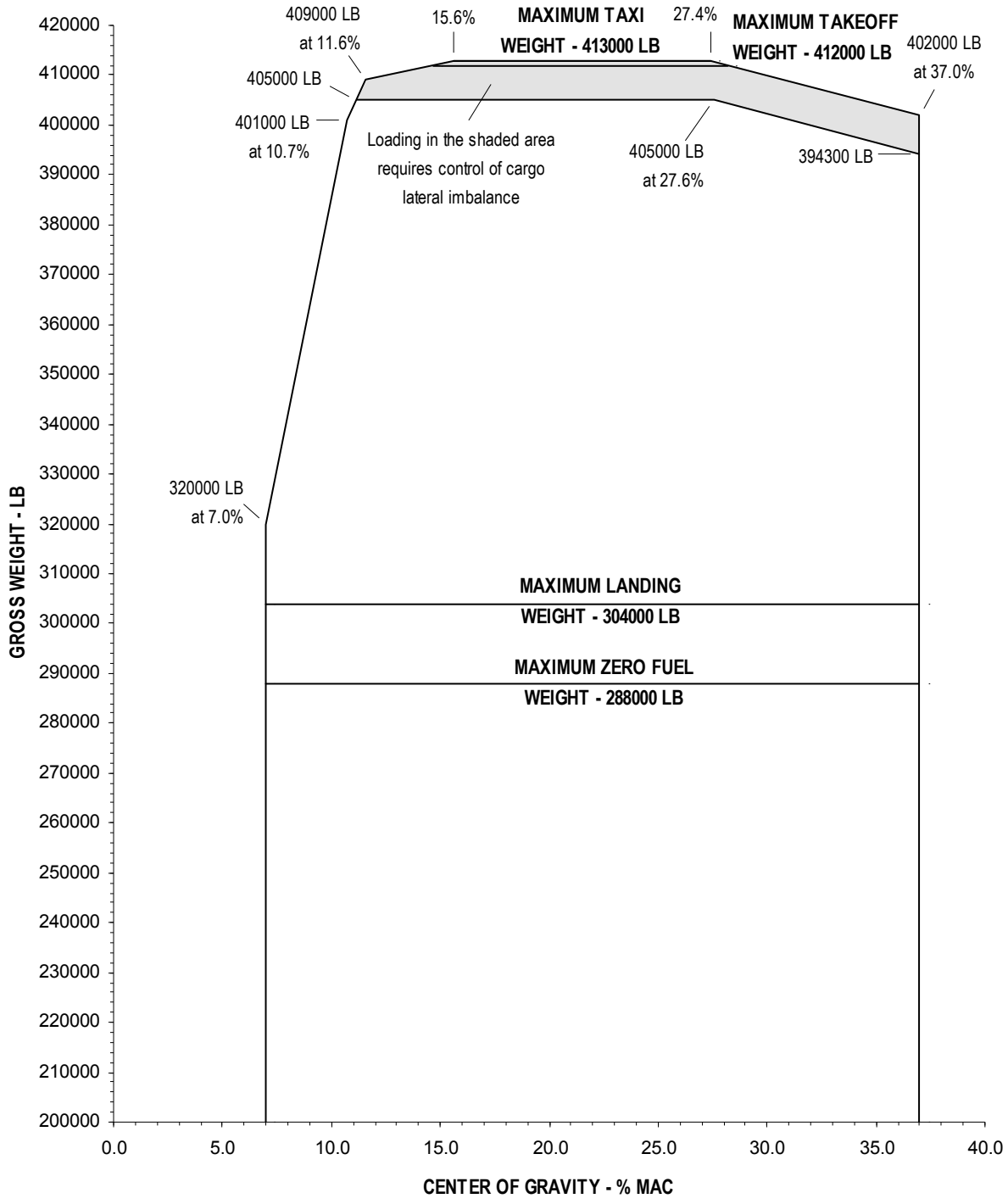

WARNING REFER TO PAGE 1 OF THIS SUBJECT FOR LIMITATIONS TO THE C.G. LIMITS.

APPLICABLE CONFIGURATIONS
G

-BOEING PROPRIETARY-

CERTIFIED WEIGHT AND CENTER OF GRAVITY LIMITS (Continued)

C.G. LIMITS - MTW 187333 KG, MLW 137892 KG, MZFW 130634 KG

The following diagram represents the certified Center of Gravity Limits in Metric units:

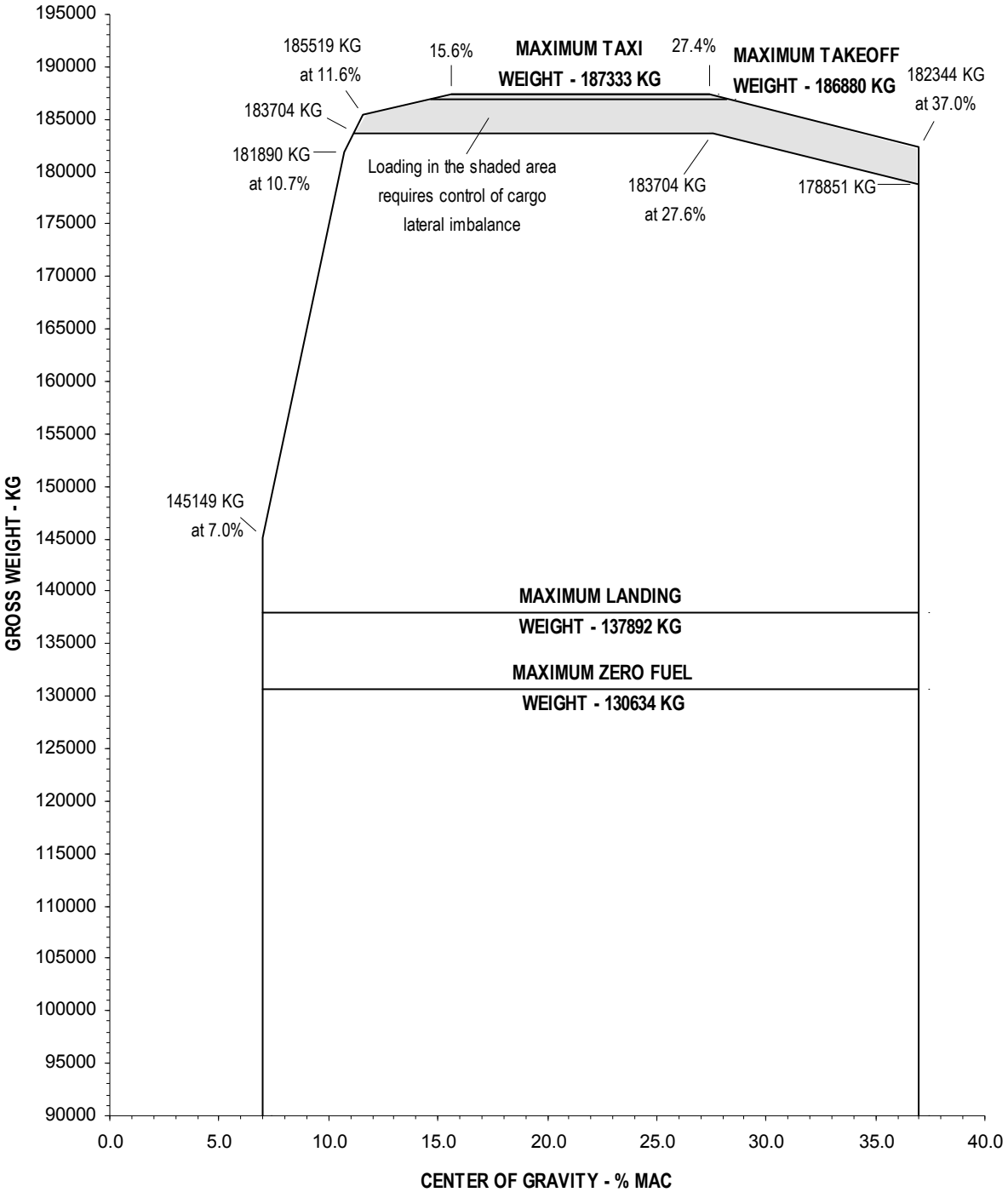

WARNING REFER TO PAGE 1 OF THIS SUBJECT FOR LIMITATIONS TO THE C.G. LIMITS.

APPLICABLE CONFIGURATIONS
G

-BOEING PROPRIETARY-

CERTIFIED WEIGHT AND CENTER OF GRAVITY LIMITS

CERTIFIED WEIGHT LIMITS - MTW 409000 LB (185519 KG)

The Maximum Certified Gross Weights and Center of Gravity Limits are shown graphically on pages 2 & 3. These Center of Gravity Limits are for taxi, takeoff, flight and landing unless otherwise specified, and are the absolute limits which must not be exceeded by the airplane center of gravity in any taxi, takeoff, flight, or landing configuration.

CERTIFIED GROSS WEIGHTS			
		LB	KG
Maximum Taxi Weight	(MTW)	409000	185519
Maximum Takeoff Weight	(MTOW)	407000	184612
Maximum Landing Weight	(MLW)	304000	137892
Maximum Zero Fuel Weight	(MZFW)	288000	130634
Minimum Flight Weight	(MFW)	179000	81193

LIMITATIONS

The following limitations must be met in order to use the certified gross weight and center of gravity limits:

- Minimum Tire Size Required
  - Nose Gear - H37X14-15/22 Ply Rating
  - Main Gear - H46X18-20/32 Ply Rating
- See CHP-SEC-SUB 1-69-024 for cargo lateral imbalance limitations.
- Refer to the Airplane Maintenance Manual Section 12-15-03 for minimum tire pressure requirements.

INTERPOLATION OF CERTIFIED CENTER OF GRAVITY LIMITS

The certified weight and center of gravity limits shown in this section identify the inflection points (end points) for each weight in terms of weight and % MAC. Intermediate points between the inflection points must be determined by interpolating the weight and moment. The method of interpolation is presented in CHP-SEC 1-02-00x.

APPLICABLE CONFIGURATIONS
B

-BOEING PROPRIETARY-

CERTIFIED WEIGHT AND CENTER OF GRAVITY LIMITS (Continued)

C.G. LIMITS - MTW 409000 LB, MLW 304000 LB, MZFW 288000 LB

The following diagram represents the certified Center of Gravity Limits in English units:

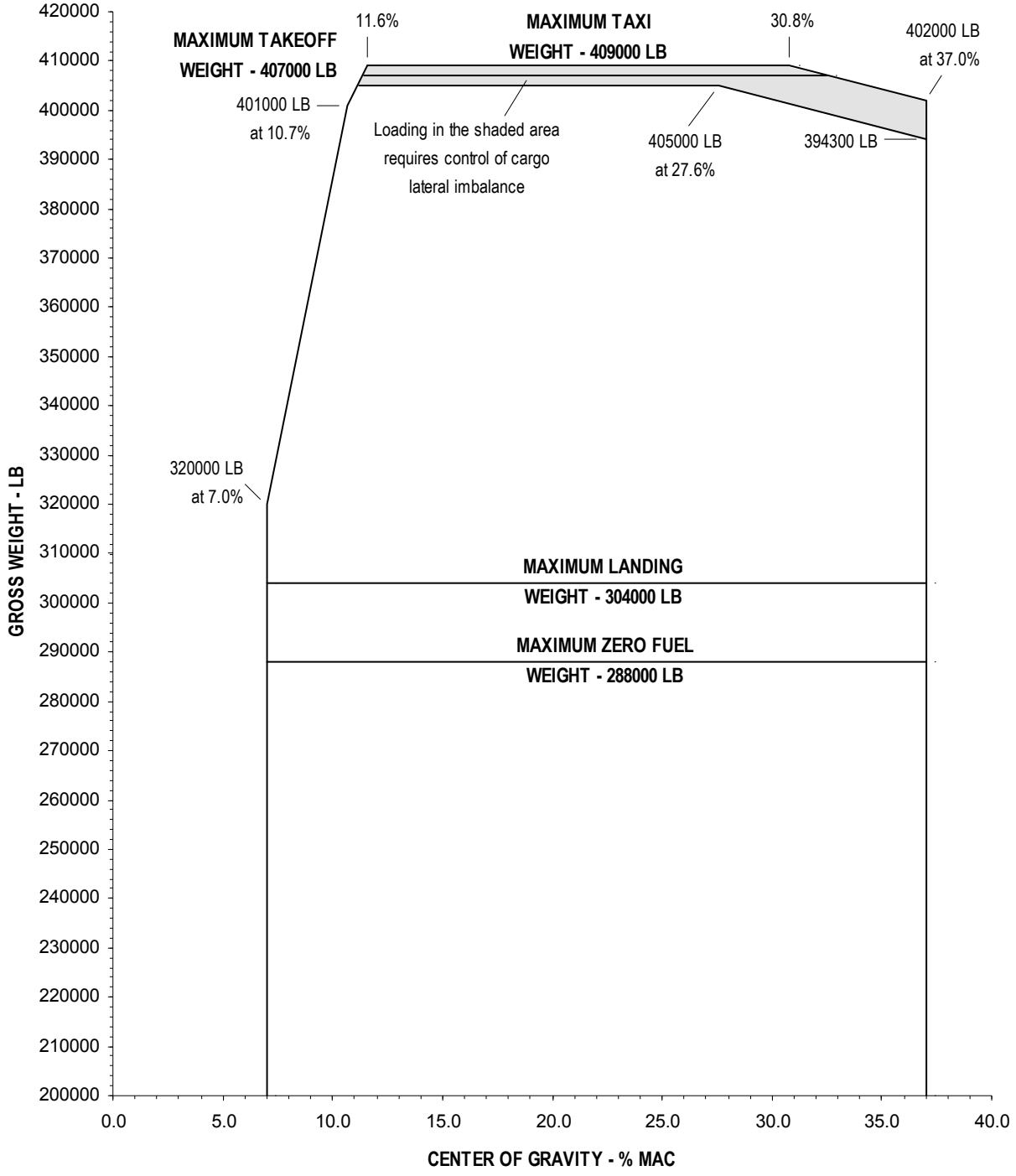

WARNING REFER TO PAGE 1 OF THIS SUBJECT FOR LIMITATIONS TO THE C.G. LIMITS.

APPLICABLE CONFIGURATIONS
B

-BOEING PROPRIETARY-

CERTIFIED WEIGHT AND CENTER OF GRAVITY LIMITS (Continued)

C.G. LIMITS - MTW 185519 KG, MLW 137892 KG, MZFW 130634 KG

The following diagram represents the certified Center of Gravity Limits in Metric units:

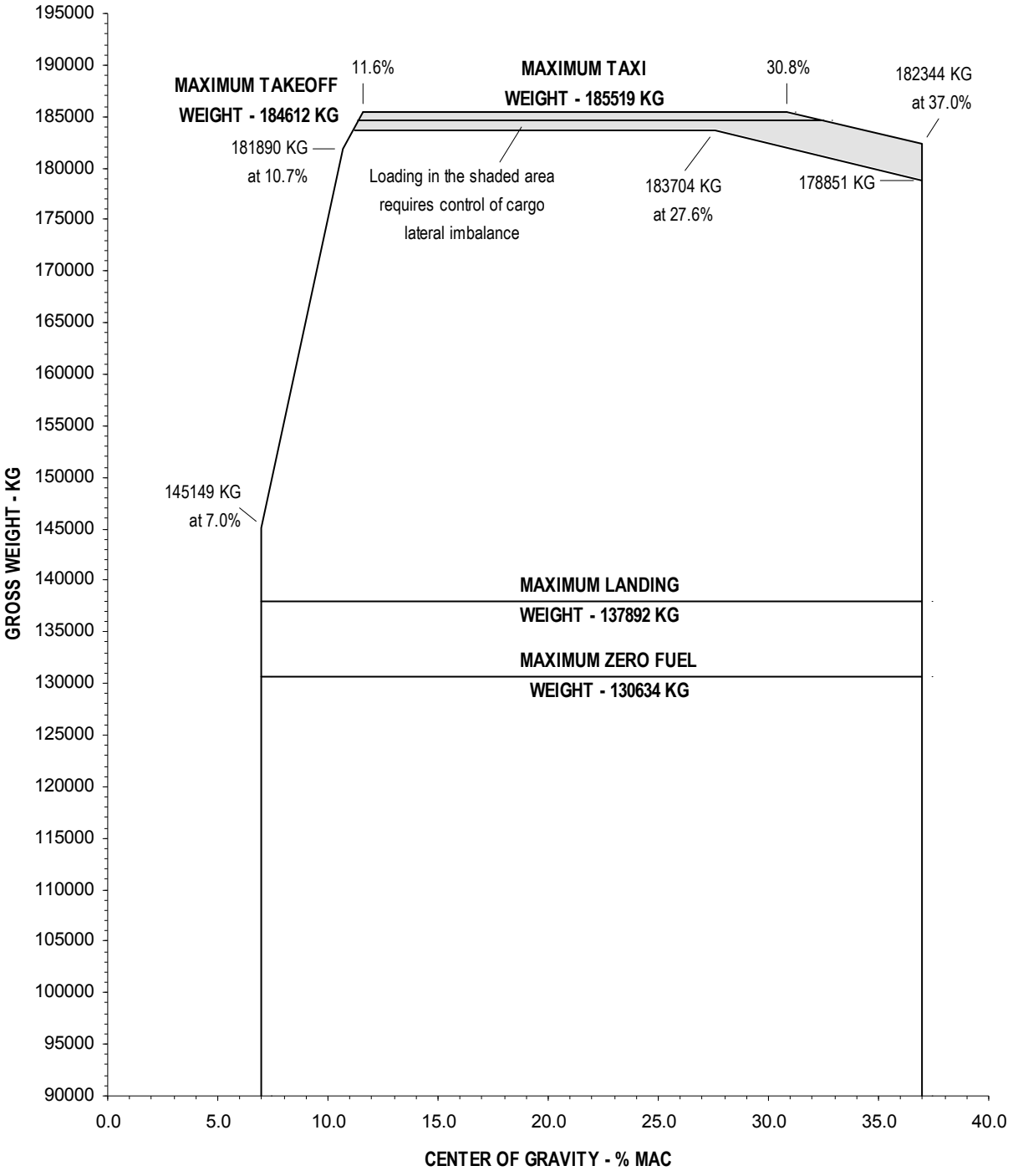

WARNING REFER TO PAGE 1 OF THIS SUBJECT FOR LIMITATIONS TO THE C.G. LIMITS.

APPLICABLE CONFIGURATIONS
B

-BOEING PROPRIETARY-

CERTIFIED WEIGHT AND CENTER OF GRAVITY LIMITS

CERTIFIED WEIGHT LIMITS - MTW 409000 LB (185519 KG)

The Maximum Certified Gross Weights and Center of Gravity Limits are shown graphically on pages 2 & 3. These Center of Gravity Limits are for taxi, takeoff, flight and landing unless otherwise specified, and are the absolute limits which must not be exceeded by the airplane center of gravity in any taxi, takeoff, flight, or landing configuration.

CERTIFIED GROSS WEIGHTS			
		LB	KG
Maximum Taxi Weight	(MTW)	409000	185519
Maximum Takeoff Weight	(MTOW)	408000	185065
Maximum Landing Weight	(MLW)	320000	145149
Maximum Zero Fuel Weight	(MZFW)	288000	130634
Minimum Flight Weight	(MFW)	179000	81193

LIMITATIONS

The following limitations must be met in order to use the certified gross weight and center of gravity limits:

- Minimum Tire Size Required
  - Nose Gear - H37X14-15/22 Ply Rating
  - Main Gear - H46X18-20/32 Ply Rating
- See CHP-SEC-SUB 1-69-024 for cargo lateral imbalance limitations.
- Refer to the Airplane Flight Manual “Operation with Alternate Forward Center of Gravity Limit for Takeoff” Appendix for use of Alternate Forward C. G. Limits.
- Refer to the Airplane Maintenance Manual Section 12-15-03 for minimum tire pressure requirements.

INTERPOLATION OF CERTIFIED CENTER OF GRAVITY LIMITS

The certified weight and center of gravity limits shown in this section identify the inflection points (end points) for each weight in terms of weight and % MAC. Intermediate points between the inflection points must be determined by interpolating the weight and moment. The method of interpolation is presented in CHP-SEC 1-02-00x.

APPLICABLE CONFIGURATIONS
F

-BOEING PROPRIETARY-

CERTIFIED WEIGHT AND CENTER OF GRAVITY LIMITS (Continued)

C.G. LIMITS - MTW 409000 LB, MLW 320000 LB, MZFW 288000 LB

The following diagram represents the certified Center of Gravity Limits in English units:

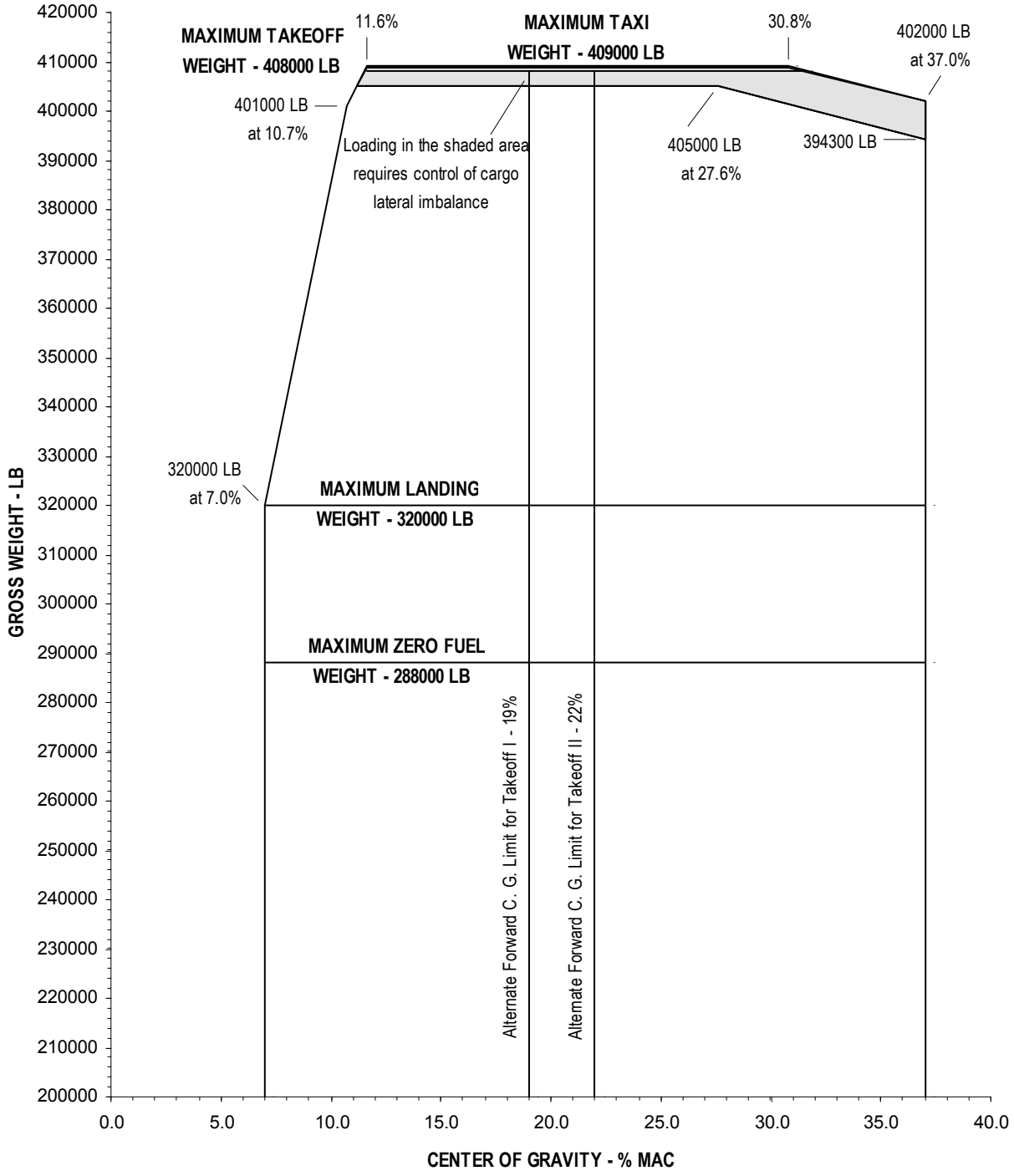

WARNING REFER TO PAGE 1 OF THIS SUBJECT FOR LIMITATIONS TO THE C.G. LIMITS.

APPLICABLE CONFIGURATIONS
F

-BOEING PROPRIETARY-

CERTIFIED WEIGHT AND CENTER OF GRAVITY LIMITS (Continued)

C.G. LIMITS - MTW 185519 KG, MLW 145149 KG, MZFW 130634 KG

The following diagram represents the certified Center of Gravity Limits in Metric units:

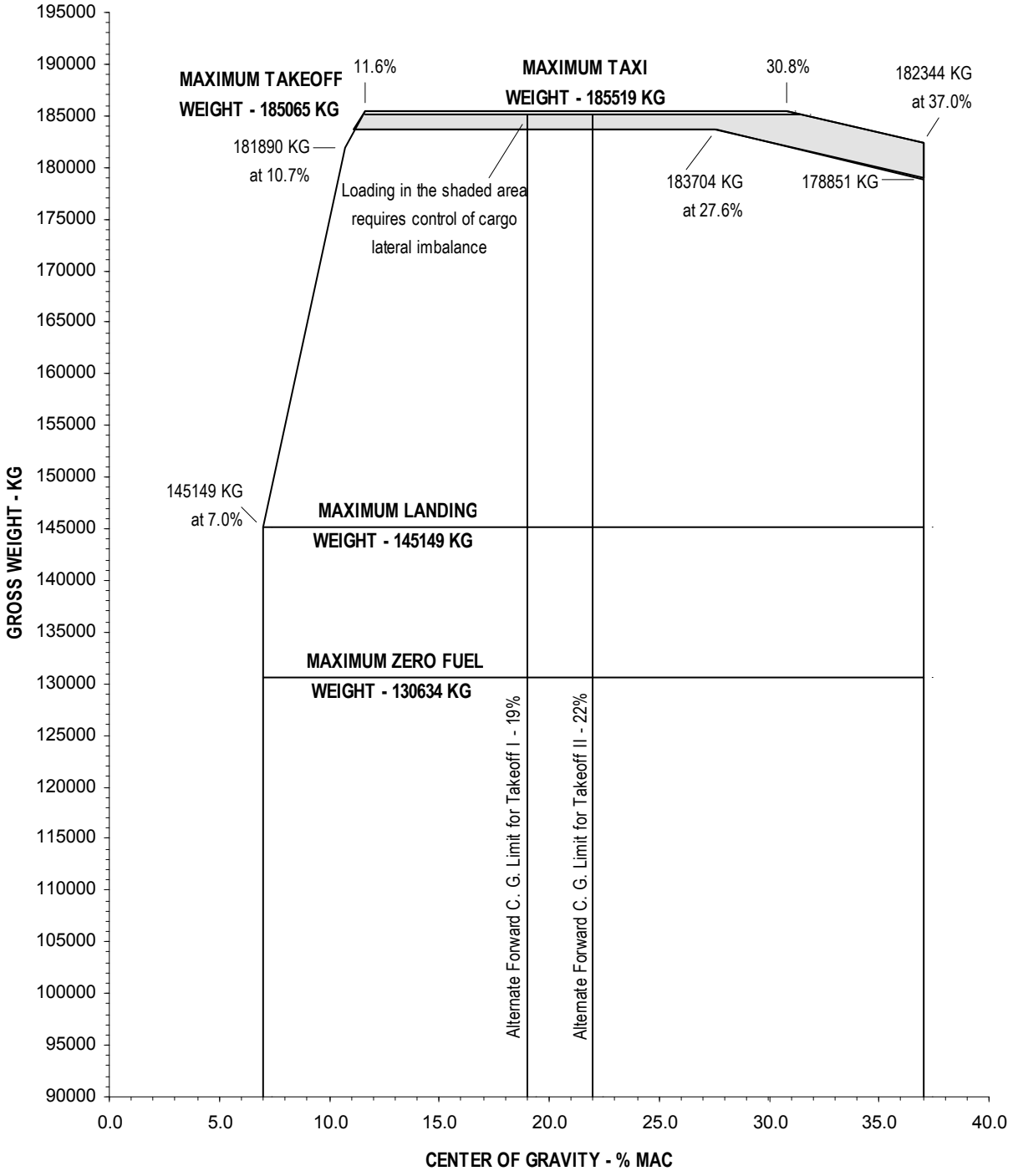

WARNING REFER TO PAGE 1 OF THIS SUBJECT FOR LIMITATIONS TO THE C.G. LIMITS.

APPLICABLE CONFIGURATIONS
F

-BOEING PROPRIETARY-

CERTIFIED WEIGHT AND CENTER OF GRAVITY LIMITS

CERTIFIED WEIGHT LIMITS - MTW 401000 LB (181890 KG)

The Maximum Certified Gross Weights and Center of Gravity Limits are shown graphically on pages 2 & 3. These Center of Gravity Limits are for taxi, takeoff, flight and landing unless otherwise specified, and are the absolute limits which must not be exceeded by the airplane center of gravity in any taxi, takeoff, flight, or landing configuration.

CERTIFIED GROSS WEIGHTS			
		LB	KG
Maximum Taxi Weight	(MTW)	401000	181890
Maximum Takeoff Weight	(MTOW)	400000	181436
Maximum Landing Weight	(MLW)	304000	137892
Maximum Zero Fuel Weight	(MZFW)	288000	130634
Minimum Flight Weight	(MFW)	179000	81193

LIMITATIONS

The following limitations must be met in order to use the certified gross weight and center of gravity limits:

- Minimum Tire Size Required
  - Nose Gear - H37X14-15/22 Ply Rating
  - Main Gear - H46X18-20/32 Ply Rating
- See CHP-SEC-SUB 1-69-024 for cargo lateral imbalance limitations.
- Refer to the Airplane Maintenance Manual Section 12-15-03 for minimum tire pressure requirements.

INTERPOLATION OF CERTIFIED CENTER OF GRAVITY LIMITS

The certified weight and center of gravity limits shown in this section identify the inflection points (end points) for each weight in terms of weight and % MAC. Intermediate points between the inflection points must be determined by interpolating the weight and moment. The method of interpolation is presented in CHP-SEC 1-02-00x.

APPLICABLE CONFIGURATIONS
E

-BOEING PROPRIETARY-

CERTIFIED WEIGHT AND CENTER OF GRAVITY LIMITS (Continued)

C.G. LIMITS - MTW 401000 LB, MLW 304000 LB, MZFW 288000 LB

The following diagram represents the certified Center of Gravity Limits in English units:

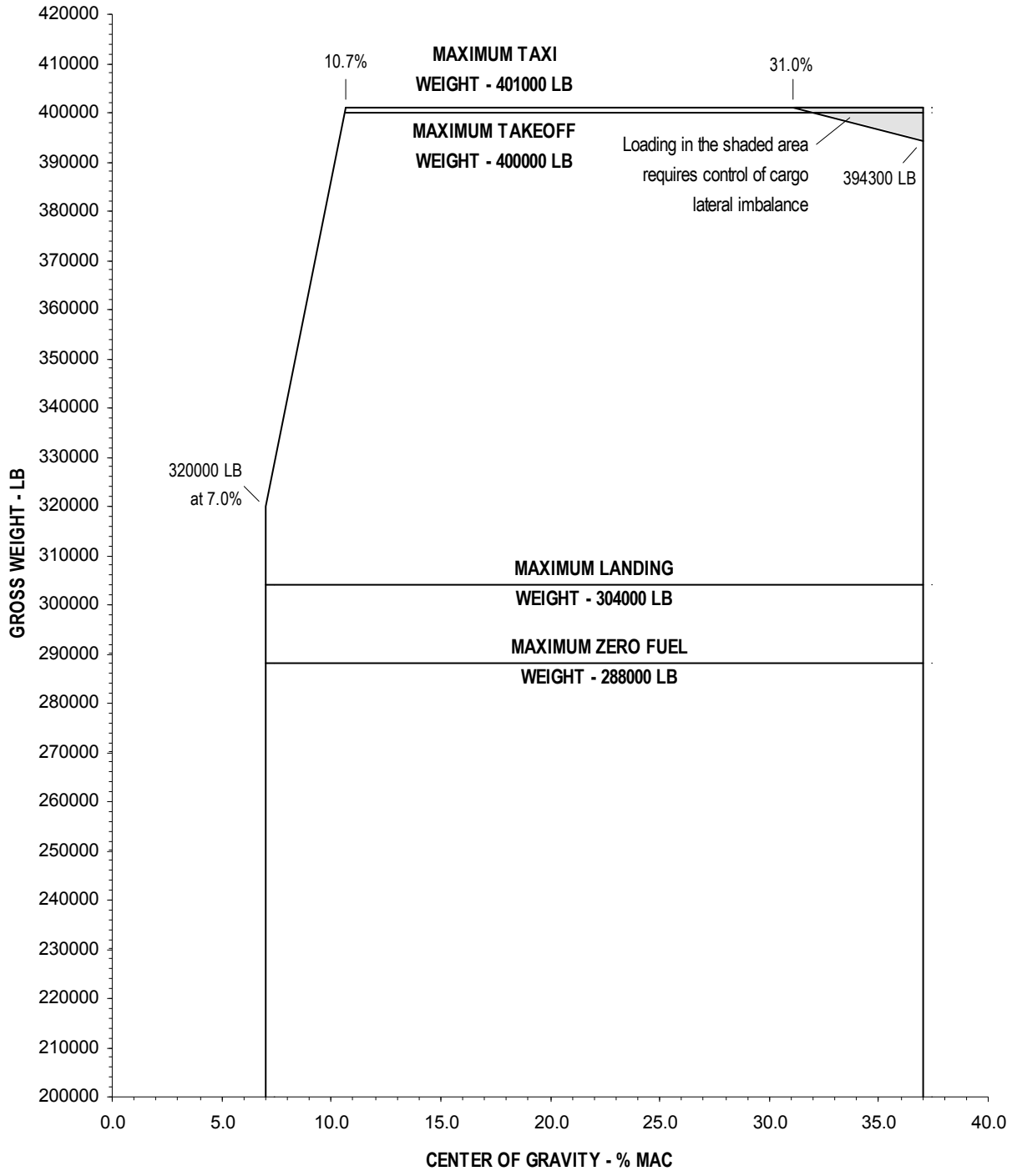

WARNING REFER TO PAGE 1 OF THIS SUBJECT FOR LIMITATIONS TO THE C.G. LIMITS.

APPLICABLE CONFIGURATIONS
E

-BOEING PROPRIETARY-

CERTIFIED WEIGHT AND CENTER OF GRAVITY LIMITS (Continued)

C.G. LIMITS - MTW 181890 KG, MLW 137892 KG, MZFW 130634 KG

The following diagram represents the certified Center of Gravity Limits in Metric units:

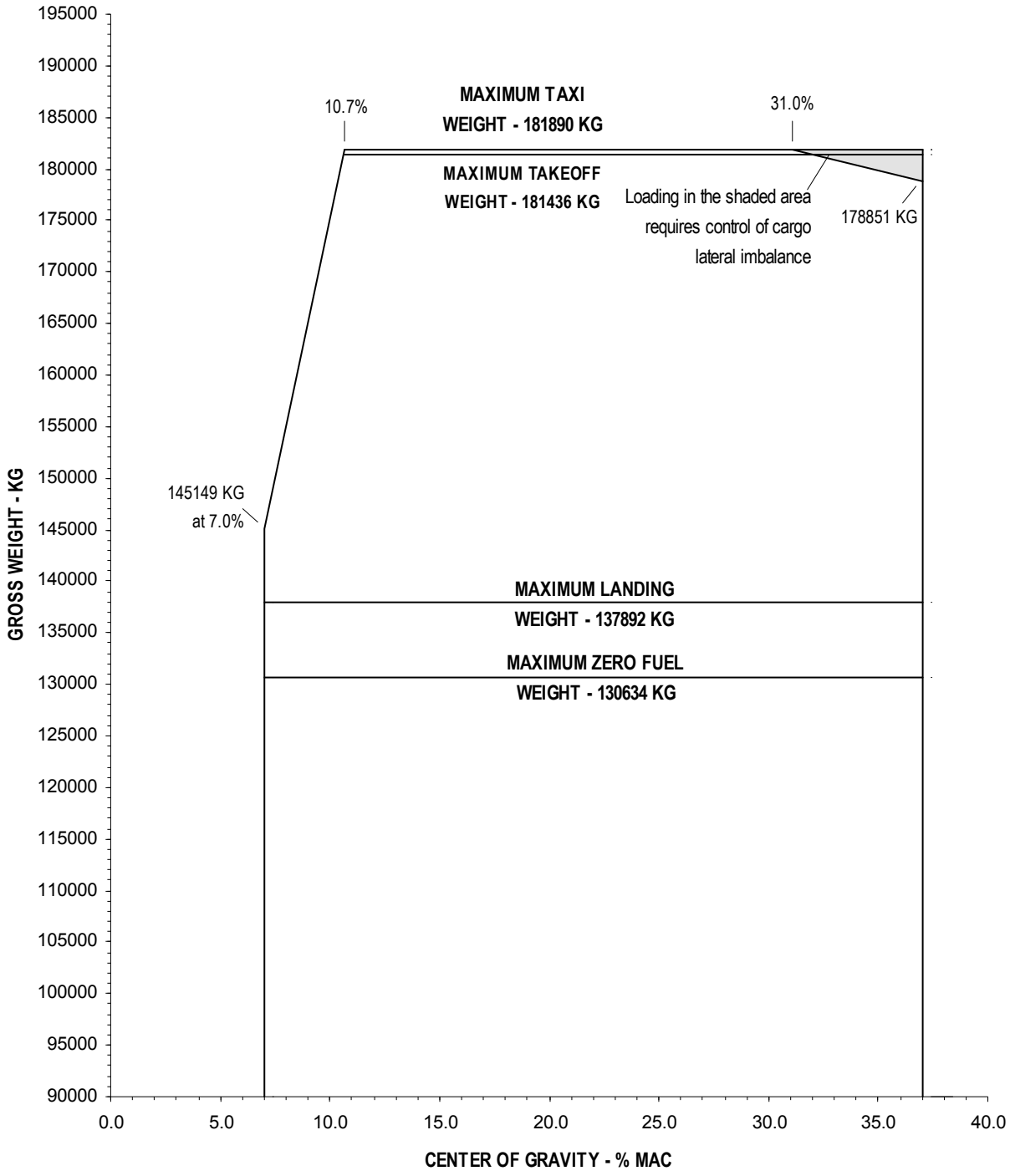

WARNING REFER TO PAGE 1 OF THIS SUBJECT FOR LIMITATIONS TO THE C.G. LIMITS.

APPLICABLE CONFIGURATIONS
E

-BOEING PROPRIETARY-

TAKEOFF HORIZONTAL STABILIZER TRIM SETTING

ENGLISH UNITS FLAPS 5, 15 & 20

The following diagram provides Takeoff Trim Settings versus Airplane Center of Gravity for Flaps 5, 15 and 20 in Pounds.

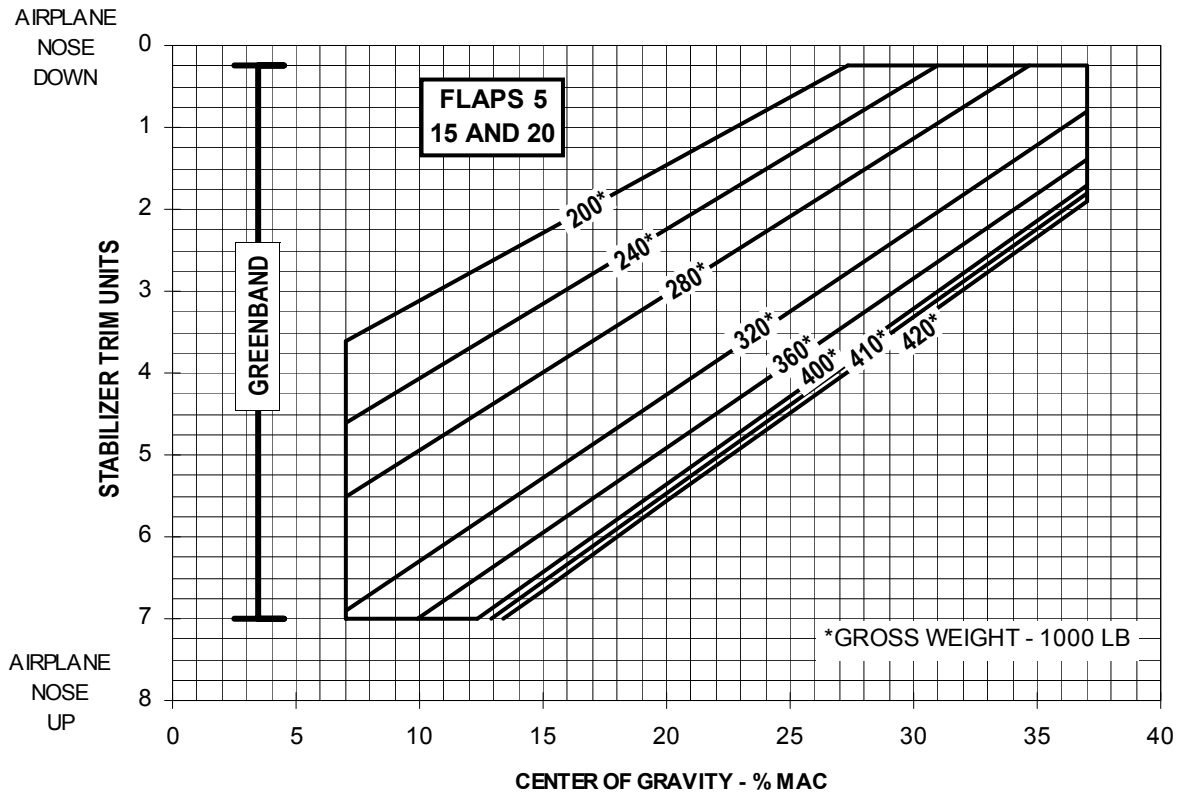

The following table provides inflection point data for the Takeoff Trim Settings versus Airplane Center of Gravity diagram.

TAKEOFF TRIM SETTING INFLECTION POINTS (Gross Weight - 1000 LB)															
200		240		280		320		360		400		410		420	
C.G.	STA B. TRIM	C.G.	STA B. TRIM	C.G.	STA B. TRIM	C.G.	STA B. TRIM	C.G.	STA B. TRIM	C.G.	STA B. TRIM	C.G.	STA B.TRIM	C.G.	STA B.TRIM
7.0	3.6	7.0	4.6	7.0	5.5	7.0	6.9	9.9	7.0	12.3	7.0	12.9	7.0	13.4	7.0
27.3	.25	31.0	.25	34.7	.25	37.0	0.8	37.0	1.4	37.0	1.7	25.0	4.4		
												37.0	1.8	37.0	1.9

APPLICABLE CONFIGURATIONS
All

-BOEING PROPRIETARY-

TAKEOFF HORIZONTAL STABILIZER TRIM SETTING (Continued)

METRIC UNITS FLAPS 5, 15 & 20

The following diagram provides Takeoff Trim Settings versus Airplane Center of Gravity for Flaps 5, 15 and 20 in Kilograms.

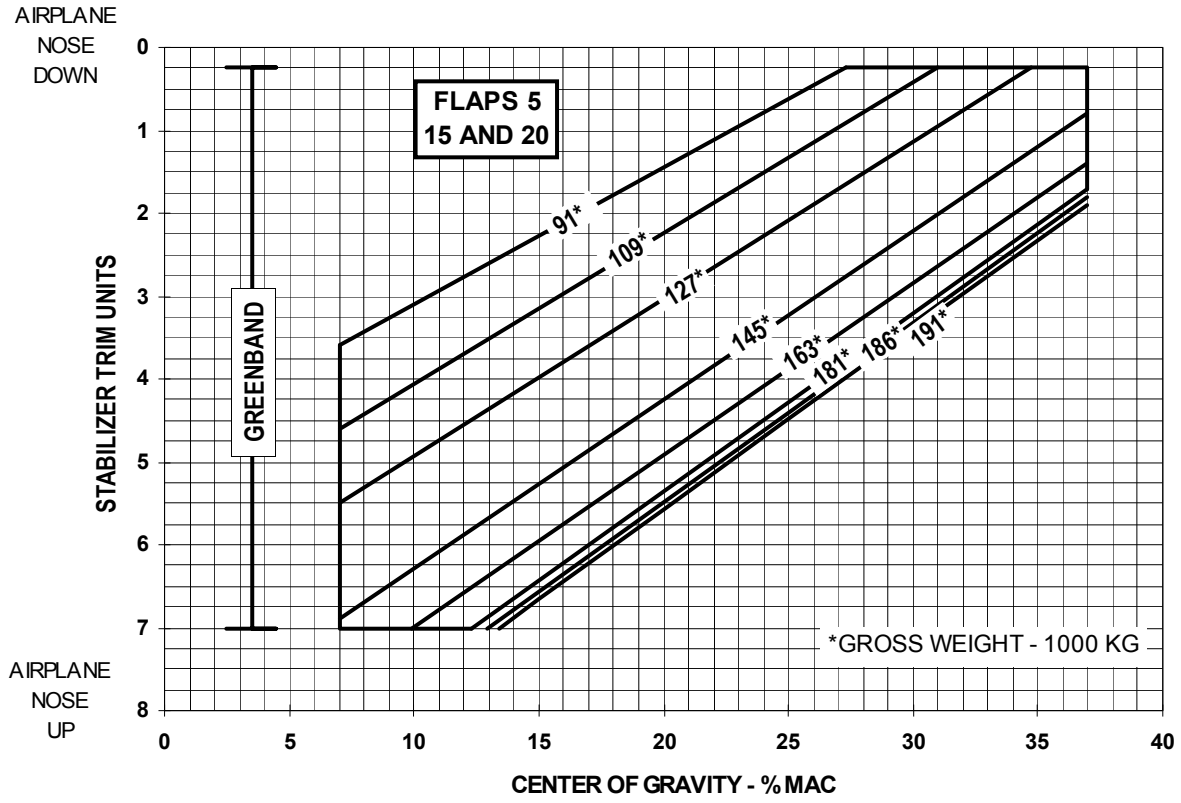

The following table provides inflection point data for the Takeoff Trim Settings versus Airplane Center of Gravity diagram.

TAKEOFF TRIM SETTING INFLECTION POINTS (Gross Weight - 1000 KG)															
91		109		127		145		163		181		186		191	
C.G.	STA B. TRIM	C.G.	STA B. TRIM	C.G.	STA B. TRIM	C.G.	STA B. TRIM	C.G.	STA B. TRIM	C.G.	STA B. TRIM	C.G.	STA B.TRIM	C.G	STA B.TRIM
7.0	3.6	7.0	4.6	7.0	5.5	7.0	6.9	9.9	7.0	12.3	7.0	12.9	7.0	13.4	7.0
27.3	.25	31.0	.25	34.7	.25	37.0	0.8	37.0	1.4	37.0	1.7	25.0	4.4		
												37.0	1.8	37.0	1.9

APPLICABLE CONFIGURATIONS
All

-BOEING PROPRIETARY-

TAKEOFF HORIZONTAL STABILIZER TRIM SETTING (Continued)

DERATED TAKEOFF TRIM SETTING

For operations with fixed derate (see the applicable appendix in the Airplane Flight Manual), the following table provides corrections to takeoff trim settings for thrust derate.

THRUST DERATE	CORRECTION TO TAKEOFF TRIM SETTING
0 to 9%	+0 Unit
10 to 14%	+1/2 Unit[a]
15 to 20%	+1 Unit[a]

[a] Not to exceed the greenband limit of 7 units

-BOEING PROPRIETARY-

LANDING GEAR AND FLAP MOVEMENT BALANCE EFFECT

LANDING GEAR RETRACTION MOMENT

Landing gear movement from the taxi position (gear down, strut approximately 80 percent compressed) to either of the following positions produces the associated airplane moment changes:

FROM TAXI POSITION TO:	APPROACH-POSITION (FULLY EXTENDED)		FLIGHT-POSITION (RETRACTED)	
GEAR	MOMENT		MOMENT	
	LB-IN.	KG-IN.	LB-IN.	KG-IN.
Nose Gear	0	0	-51000	-23133
Main Gear	+24000	+10886	-291000	-131995
Total Moment Change	+24000	+10886	-342000	-155128

FLAPS RETRACTION MOMENT

The following table provides airplane moment changes caused by retraction of the leading edge (L.E.) and the trailing edge (T.E.) flaps.

HANDLE POSITION		MOMENT LB-IN.			MOMENT KG-IN.		
FROM	TO	L.E. FLAPS	T.E. FLAPS	TOTAL	L.E. FLAPS	T.E. FLAPS	TOTAL
30	25	0	- 1000	- 1000	0	- 454	- 454
30	20	+ 3000	- 4000	- 1000	+ 1361	- 1815	- 454
30	15	+ 3000	- 9000	- 6000	+ 1361	- 4083	- 2722
30	5	+ 3000	- 19000	- 16000	+ 1361	- 8619	- 7258
30	1	+ 3000	- 83000	- 80000	+ 1361	- 37648	- 36287
30	0	+15000	- 83000	- 68000	+ 6804	- 37648	- 30844

NOTE A forward movement of airplane center of gravity is a negative moment. An aft movement of airplane center of gravity is a positive moment.

APPLICABLE CONFIGURATIONS
All

-BOEING PROPRIETARY-

FUEL TANK ARRANGEMENT AND CAPACITIES

FUEL TANK LOCATIONS

The following diagram shows the fuel tank arrangement:

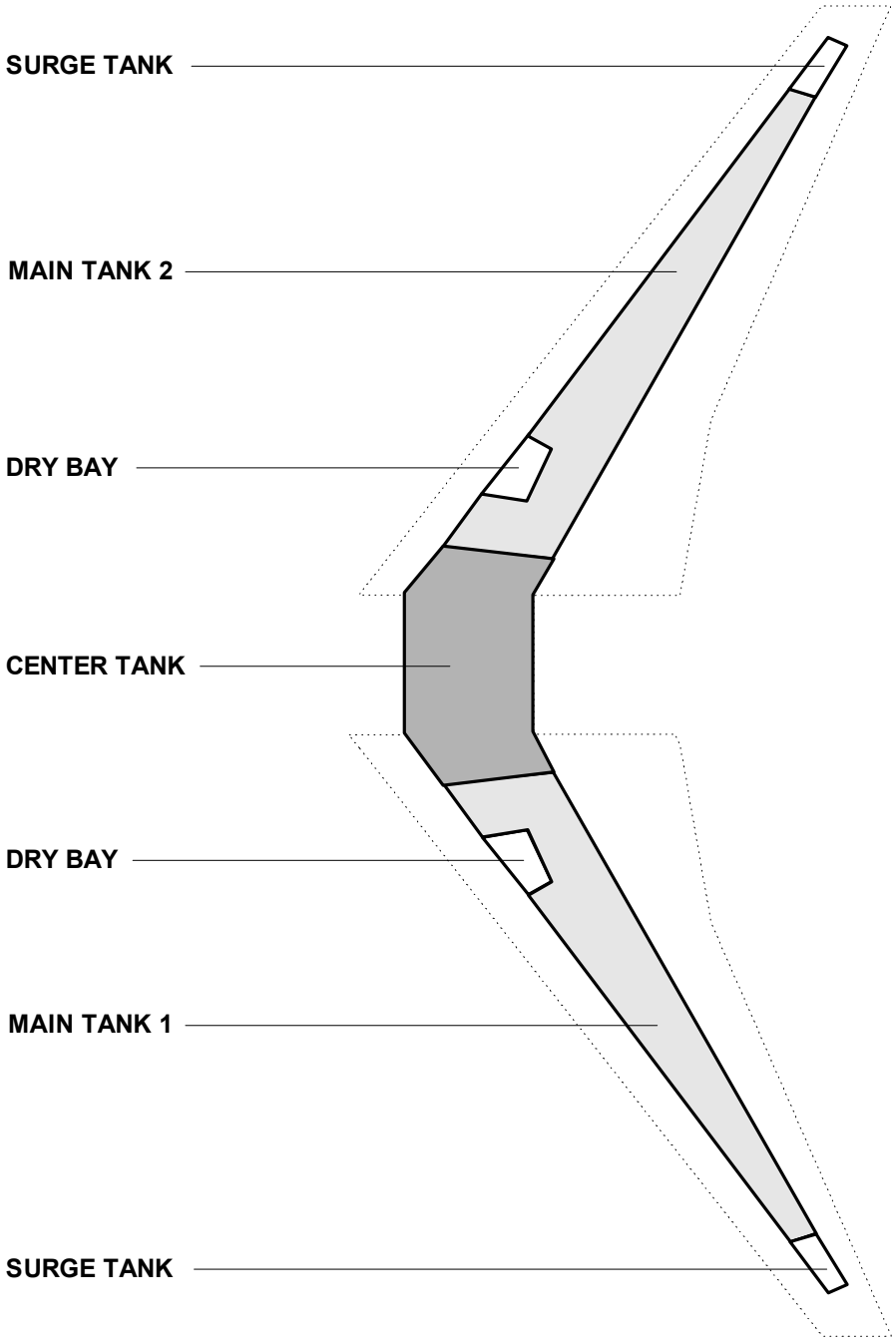

APPLICABLE CONFIGURATIONS
All

-BOEING PROPRIETARY-

FUEL TANK ARRANGEMENT AND CAPACITIES (Continued)

MAXIMUM ALLOWABLE FUEL WEIGHT

The maximum allowable usable tank quantities shown in the following table are based on a fuel density of 7.1 LB/U.S. GAL. (0.8507 KG/L).

LOCATION	MAXIMUM VOLUME		MAXIMUM WEIGHT	
	U.S. GAL.	L	LB	KG
Main Tank 1 or 2	6010.0	22750.3	42671.0	19355.2
Center Tank	11900.0	45046.4	84490.0	38324.0

USABLE FUEL QUANTITIES AND LOCATIONS

The following tables provide volume and center of gravity data for usable fuel. For definitions of “usable”, “drainable usable” and “trapped usable”, refer to General Information (CHP-SEC 1-00-00x).

Under Wing Fueling

FUEL CATEGORY	FUEL LOCATION	VOLUME		B.A. IN.
		U.S. GAL.	L	
Drainable Usable	Main Tank 1	6010.0	22750.3	1013.2
	Main Tank 2	6010.0	22750.3	1013.2
	Center Tank	11900.0	45046.4	872.7
	Refuel Manifold Line	40.0[b]	151.4[b]	1016.8
	Total Drainable	23960.0	90698.4	943.4
Trapped Usable	Feed Lines[a]	4.0[b]	15.1[b]	848.8
	Total Trapped	4.0[b]	15.1[b]	848.8
TOTAL USABLE		23964.0	90713.6	943.4

[a] All fuel in lines between boost pump check valves and engine pump inlets, bypass valves, defuel valves, and APU fuel control. Pump inlet line volume included in tank volume.
[b] These volumes are not gauged.

Over Wing Fueling

FUEL CATEGORY	FUEL LOCATION	VOLUME		B.A. IN.
		U.S. GAL.	L	
Drainable Usable	Main Tank 1	5925.0	22428.6	1000.4
	Main Tank 2	5925.0	22428.6	1000.4
TOTAL USABLE		11850.0	44857.2	1000.4

APPLICABLE CONFIGURATIONS
All

-BOEING PROPRIETARY-

FUEL TANK ARRANGEMENT AND CAPACITIES (Continued)

UNUSABLE FUEL QUANTITIES AND LOCATIONS

The following table provides volume and center of gravity data for unusable fuel. For definitions of “unusable”, “drainable unusable” and “trapped unusable”, refer to General Information (CHP-SEC 1-00-00x).

FUEL CATEGORY	FUEL LOCATION	VOLUME		B.A. IN.
		U.S. GAL.	L	
Drainable Unusable[a]	Main Tank 1	3.5	13.2	921.3
	Main Tank 2	3.5	13.2	921.3
	Center Tank	2.3	8.7	904.6
	Total Drainable	9.3	35.1	917.2
Trapped Unusable[a]	Main Tank 1	2.1	7.9	920.0
	Main Tank 2	2.1	7.9	920.0
	Center Tank	15.0	56.8	862.5
	Fuel Feed Line[b]	13.3	50.3	961.2
	APU Feed Line	1.0	3.8	1450.6
	Engines	5.0	18.9	835.4
	Total Trapped	38.5	145.6	914.6
TOTAL UNUSABLE		47.8	180.7	915.1

[a] Based on an airplane nominal ground attitude of 0 degrees nose down and 0 degrees roll.
[b] All fuel in lines between boost pump check valves and engine pump inlets, bypass valves, defuel valves, and APU fuel control. Pump inlet line volume included in tank volume.

APPLICABLE CONFIGURATIONS
All

-BOEING PROPRIETARY-

FUEL MANAGEMENT

FUEL LOADING PROCEDURES

Fuel loading limitations and procedures are detailed below.

Loading Limitations

Fuel density must be between the minimum allowable fuel density of 6.1 LB/GAL. (0.7309 KG/L) and the maximum allowable fuel density of 7.1 LB/GAL. (0.8507 KG/L).

Loading Procedures

Use the following procedures for loading fuel:

1. Load main tanks 1 and 2 equally to the desired fuel quantity or until full.
2. Load center tank if additional fuel is required after main tanks 1 and 2 are full.

Up to 22,050 LB (10,000 KG) of fuel may be loaded in the center tank with less than full main tanks,[1] provided the weight of the fuel in the center tank plus the actual Zero Fuel Weight does not exceed the Maximum Zero Fuel Weight, and balance limits are observed. Fuel must be used in accordance with the Fuel Usage for the center tank fuel.

NOTE Recommended fuel loading reflects the final dispatch fuel distribution, not a loading sequence. Fuel tanks may be loaded individually, simultaneously or in any sequence.

LATERAL FUEL IMBALANCE

The following lateral imbalance criteria between main tanks 1 and 2 must be observed for all operations:

- Lateral fuel imbalance must not exceed 2500 LB (1133 KG) when total main tank fuel is less than or equal to 48000 LB (21772 KG).
- Lateral fuel imbalance must not exceed 1500 LB (680 KG) when total main fuel tank exceeds 79800 LB (36196 KG).
- Allowable lateral fuel imbalance is determined using linear interpolation between 1500 LB (680 KG) and 2500 LB (1133 KG) when the main tank fuel is greater than 48000 LB (21772 KG) and less than or equal to 79800 LB (36196 KG), respectively.

[1] With the fuel jettison system installed and activated a minimum of 10300 LB (4672 KG) of fuel must be in the main tanks.

APPLICABLE CONFIGURATIONS
All

-BOEING PROPRIETARY-

FUEL MANAGEMENT (Continued)

FUEL USAGE PROCEDURES

Fuel usage procedures are detailed below.

Usage Procedures

Use the following procedures for fuel usage:

- Main Tank Fuel Only: Start engines, taxi and takeoff using respective main tank to engine equally. Continue through remainder of flight.
- Center Tank Fuel: Start engines, taxi and takeoff using center tank to both engines. Continue flight until center tank fuel is depleted, then use respective main tank to engine equally through remainder of flight.

NOTE Refer to the Airplane Flight Manual, Section 1 for fuel usage procedure.

APU FUEL USAGE

Fuel consumption should be accounted for during APU operation per instructions in the Operations Manual.

APPLICABLE CONFIGURATIONS
All

-BOEING PROPRIETARY-

FUEL TANK QUANTITIES AND BALANCE ARMS

COMBINED MAIN TANKS 1 AND 2 IN U.S. GALLONS

The following table provides usable, gauged fuel data in U.S. gallons. For each of the volumes listed, the volume is split equally between Main Tank 1 and Main Tank 2 (for example, the 1000 gallon entry represents 500 gallons in Main Tank 1 and 500 gallons in Main Tank 2, each at B.A. 923.8).

U.S. GALLONS

COMBINED MAIN TANKS 1 & 2		COMBINED MAIN TANKS 1 & 2	
VOLUME U.S. GAL.	B.A. IN.	VOLUME U.S. GAL	B.A. IN.
100	921.4	3100	935.5
200	921.3	3200	936.0
300	921.0	3300	936.5
400	921.2	3400	937.0
500	921.5	3500	937.5
600	921.9	3600	938.0
700	922.4	3700	938.5
800	922.8	3800	939.0
900	923.2	3900	939.5
1000	923.8	4000	940.0
1100	924.3	4100	940.4
1200	924.7	4200	940.9
1300	925.3	4300	941.4
1400	925.8	4400	941.9
1500	926.4	4500	942.3
1600	927.0	4600	942.8
1700	927.6	4700	943.2
1800	928.2	4800	943.7
1900	928.8	4900	944.2
2000	929.4	5000	944.6
2100	930.0	5100	945.0
2200	930.5	5200	945.4
2300	931.0	5300	945.8
2400	931.6	5400	946.2
2500	932.2	5500	946.7
2600	932.7	5600	947.2
2700	933.3	5700	947.6
2800	933.8	5800	948.1
2900	934.4	5900	948.5
3000	935.0	6000	948.9

APPLICABLE CONFIGURATIONS
All

-BOEING PROPRIETARY-

FUEL TANK QUANTITIES AND BALANCE ARMS (Continued)

U.S. GALLONS (Continued)

COMBINED MAIN TANKS 1 & 2	
VOLUME U.S. GAL.	B.A. IN.
6100	949.4
6200	950.0
6300	950.6
6400	951.2
6500	951.9
6600	952.6
6700	953.4
6800	954.2
6900	955.0
7000	955.9
7100	956.7
7200	957.6
7300	958.5
7400	959.4
7500	960.2
7600	961.1
7700	961.9
7800	962.7
7900	963.6
8000	964.5
8100	965.4
8200	966.3
8300	967.2
8400	968.1
8500	969.1
8600	970.1
8700	971.0
8800	971.9
8900	972.9
9000	974.0
9100	975.1
9200	976.1
9300	977.1
9400	978.2
9500	979.3

COMBINED MAIN TANKS 1 & 2	
VOLUME U.S. GAL	B.A. IN.
9600	980.4
9700	981.6
9800	982.7
9900	983.8
10000	985.0
10100	986.2
10200	987.4
10300	988.6
10400	989.8
10500	991.1
10600	992.4
10700	993.7
10800	995.0
10900	996.4
11000	997.8
11100	999.2
11200	1000.6
11300	1002.0
11400	1003.4
11500	1004.9
11600	1006.5
11700	1008.0
11800	1009.6
11900	1011.2
12000	1012.9
12020	1013.2

APPLICABLE CONFIGURATIONS
All

-BOEING PROPRIETARY-

FUEL TANK QUANTITIES AND BALANCE ARMS (Continued)

COMBINED MAIN TANKS 1 AND 2 IN LITERS

The following table provides usable, gauged fuel data in liters. For each of the volumes listed, the volume is split equally between Main Tank 1 and Main Tank 2 (for example, the 4000 liter entry represents 2000 liters in Main Tank 1 and 2000 liters in Main Tank 2, each at B.A. 924.1).

LITERS

COMBINED MAIN TANKS 1 & 2		COMBINED MAIN TANKS 1 & 2	
VOLUME L	B.A. IN.	VOLUME L	B.A. IN.
400	921.4	12400	936.4
800	921.3	12800	936.9
1200	921.0	13200	937.4
1600	921.3	13600	938.0
2000	921.6	14000	938.5
2400	922.1	14400	939.0
2800	922.6	14800	939.5
3200	923.0	15200	940.1
3600	923.5	15600	940.5
4000	924.1	16000	941.0
4400	924.5	16400	941.6
4800	925.1	16800	942.1
5200	925.7	17200	942.5
5600	926.3	17600	943.0
6000	926.9	18000	943.5
6400	927.5	18400	944.0
6800	928.2	18800	944.5
7200	928.8	19200	944.9
7600	929.4	19600	945.3
8000	930.1	20000	945.7
8400	930.6	20400	946.2
8800	931.1	20800	946.7
9200	931.8	21200	947.2
9600	932.4	21600	947.6
10000	933.0	22000	948.1
10400	933.5	22400	948.6
10800	934.1	22800	949.0
11200	934.8	23200	949.6
11600	935.3	23600	950.2
12000	935.9	24000	950.8

APPLICABLE CONFIGURATIONS
All

-BOEING PROPRIETARY-

FUEL TANK QUANTITIES AND BALANCE ARMS (Continued)

LITERS (Continued)

COMBINED MAIN TANKS 1 & 2	
VOLUME L	B.A. IN.
24400	951.5
24800	952.3
25200	953.1
25600	953.9
26000	954.7
26400	955.7
26800	956.5
27200	957.5
27600	958.4
28000	959.4
28400	960.2
28800	961.2
29200	962.0
29600	962.9
30000	963.8
30400	964.8
30800	965.7
31200	966.7
31600	967.6
32000	968.6
32400	969.7
32800	970.7
33200	971.6
33600	972.7
34000	973.8
34400	975.0
34800	976.0
35200	977.1
35600	978.2
36000	979.4

COMBINED MAIN TANKS 1 & 2	
VOLUME L	B.A. IN.
36400	980.6
36800	981.8
37200	983.0
37600	984.2
38000	985.5
38400	986.7
38800	988.0
39200	989.3
39600	990.6
40000	992.0
40400	993.3
40800	994.7
41200	996.2
41600	997.7
42000	999.1
42400	1000.6
42800	1002.1
43200	1003.6
43600	1005.2
44000	1006.9
44400	1008.5
44800	1010.2
45200	1011.9
45500	1013.2

APPLICABLE CONFIGURATIONS
All

-BOEING PROPRIETARY-

FUEL TANK QUANTITIES AND BALANCE ARMS

CENTER TANK IN U.S. GALLONS

The following table provides usable, gauged fuel data in U.S. gallons.

U.S. GALLONS

CENTER TANK		CENTER TANK	
VOLUME U.S. GAL.	B.A. IN.	VOLUME U.S. GAL	B.A. IN.
100	896.8	3100	879.6
200	898.4	3200	879.5
300	896.8	3300	879.4
400	895.2	3400	879.3
500	893.7	3500	879.2
600	892.2	3600	879.1
700	890.7	3700	879.0
800	889.1	3800	878.9
900	887.7	3900	878.8
1000	886.8	4000	878.7
1100	886.0	4100	878.6
1200	885.3	4200	878.6
1300	884.5	4300	878.5
1400	883.8	4400	878.4
1500	883.1	4500	878.4
1600	882.6	4600	878.3
1700	882.2	4700	878.2
1800	881.9	4800	878.1
1900	881.7	4900	878.1
2000	881.4	5000	878.0
2100	881.1	5100	878.0
2200	880.9	5200	877.9
2300	880.7	5300	877.8
2400	880.5	5400	877.8
2500	880.4	5500	877.8
2600	880.3	5600	877.7
2700	880.2	5700	877.7
2800	880.0	5800	877.6
2900	879.9	5900	877.6
3000	879.8	6000	877.6

APPLICABLE CONFIGURATIONS
All

-BOEING PROPRIETARY-

FUEL TANK QUANTITIES AND BALANCE ARMS (Continued)

U.S. GALLONS (Continued)

CENTER TANK	
VOLUME U.S. GAL.	B.A. IN.
6100	877.5
6200	877.5
6300	877.5
6400	877.4
6500	877.4
6600	877.4
6700	877.3
6800	877.3
6900	877.3
7000	877.2
7100	877.2
7200	877.2
7300	877.1
7400	877.1
7500	877.1
7600	877.1
7700	877.0
7800	877.0
7900	877.0
8000	877.0
8100	877.0
8200	876.9
8300	876.9
8400	876.9
8500	876.9
8600	876.8
8700	876.8
8800	876.8
8900	876.8
9000	876.8

CENTER TANK	
VOLUME U.S. GAL	B.A. IN.
9100	876.7
9200	876.7
9300	876.7
9400	876.6
9500	876.6
9600	876.6
9700	876.5
9800	876.4
9900	876.4
10000	876.3
10100	876.2
10200	876.1
10300	876.0
10400	875.9
10500	875.7
10600	875.6
10700	875.4
10800	875.2
10900	875.1
11000	874.8
11100	874.6
11200	874.5
11300	874.3
11400	874.1
11500	873.9
11600	873.6
11700	873.3
11800	872.9
11900	872.7

APPLICABLE CONFIGURATIONS
All

-BOEING PROPRIETARY-

FUEL TANK QUANTITIES AND BALANCE ARMS (Continued)

CENTER TANK IN LITERS

The following table provides usable, gauged fuel data in liters.

LITERS

CENTER TANK		CENTER TANK	
VOLUME L	B.A. IN.	VOLUME L	B.A. IN.
400	897.5	12400	879.4
800	897.6	12800	879.3
1200	895.9	13200	879.2
1600	894.3	13600	879.1
2000	892.7	14000	879.0
2400	891.1	14400	878.9
2800	889.4	14800	878.8
3200	887.9	15200	878.6
3600	886.9	15600	878.6
4000	886.0	16000	878.5
4400	885.3	16400	878.4
4800	884.4	16800	878.4
5200	883.7	17200	878.3
5600	883.0	17600	878.2
6000	882.5	18000	878.1
6400	882.1	18400	878.1
6800	881.8	18800	878.0
7200	881.6	19200	878.0
7600	881.3	19600	877.9
8000	881.0	20000	877.8
8400	880.8	20400	877.8
8800	880.6	20800	877.8
9200	880.4	21200	877.7
9600	880.3	21600	877.7
10000	880.2	22000	877.6
10400	880.0	22400	877.6
10800	879.9	22800	877.5
11200	879.8	23200	877.5
11600	879.6	23600	877.5
12000	879.5	24000	877.4

APPLICABLE CONFIGURATIONS
All

-BOEING PROPRIETARY-

FUEL TANK QUANTITIES AND BALANCE ARMS (Continued)

LITERS (Continued)

CENTER TANK	
VOLUME L	B.A. IN.
24400	877.4
24800	877.4
25200	877.3
25600	877.3
26000	877.3
26400	877.2
26800	877.2
27200	877.2
27600	877.1
28000	877.1
28400	877.1
28800	877.1
29200	877.0
29600	877.0
30000	877.0
30400	877.0
30800	876.9
31200	876.9
31600	876.9
32000	876.9
32400	876.8
32800	876.8
33200	876.8
33600	876.8
34000	876.8
34400	876.7
34800	876.7
35200	876.7
35600	876.6
36000	876.6

CENTER TANK	
VOLUME L	B.A. IN.
36400	876.5
36800	876.4
37200	876.4
37600	876.3
38000	876.2
38400	876.1
38800	876.0
39200	875.9
39600	875.7
40000	875.6
40400	875.4
40800	875.2
41200	875.0
41600	874.7
42000	874.6
42400	874.4
42800	874.2
43200	874.0
43600	873.7
44000	873.4
44400	873.0
44800	872.8
45046	872.7

APPLICABLE CONFIGURATIONS
All

-BOEING PROPRIETARY-

SYSTEM FLUIDS

ENGINE SYSTEM OIL (GENERAL ELECTRIC CF6-80C ENGINES)

The following table lists total engine system oil (including trapped oil):

FLUID CATEGORY	ENGINE	VOLUME		WEIGHT		B.A. IN.
		U.S. GAL.	L	LB	KG	
Drainable Oil	No. 1	8.4	31.8	70.1	31.8	831.7
	No. 2	8.4	31.8	70.1	31.8	831.7
	Total	16.8	63.6	140.2	63.6	831.7
Trapped Oil	No. 1	2.0	7.6	16.7	7.6	818.0
	No. 2	2.0	7.6	16.7	7.6	818.0
	Total	4.0	15.2	33.4	15.2	818.0

NOTE Oil density used is 8.35 LB/U.S. GAL. (1.00 KG/L).

INTEGRATED DRIVE GENERATOR

The following table lists the integrated drive oil:

TANK LOCATION	VOLUME		WEIGHT		B.A. IN.
	U.S. GAL.	L	LB	KG	
No. 1	1.9	7.0	15.5	7.0	845.1
No. 2	1.9	7.0	15.5	7.0	845.1
Total	3.7	14.0	30.9	14.0	845.1

NOTE Oil density used is 8.35 LB/U.S. GAL. (1.00 KG/L).

HYDRAULIC SYSTEM FLUID

The following table provides the hydraulic system fluid totals:

LOCATION	VOLUME		WEIGHT		B.A. IN.
	U.S. GAL.	L	LB	KG	
System Left	18.2	68.8	153.2	69.4	1098.4
System Right	19.5	73.8	164.2	74.5	950.9
System Center	44.7	169.2	376.4	170.9	986.2
Total	82.4	311.8	693.8	314.8	1002.6

NOTE Hydraulic fluid density used is 8.42 LB/U.S. GAL. (1.01 KG/L). (Density Range: 8.32 (Chevron Hyjet IV) to 8.42 (Skydrol LD4) LB/U.S. GAL.; 1.00 to 1.01 KG/L)

APPLICABLE CONFIGURATIONS
All

-BOEING PROPRIETARY-

SYSTEM FLUIDS (Continued)

LANDING GEAR SYSTEM FLUID

The following table lists the landing gear system hydraulic fluid totals:

FLUID LOCATION	VOLUME		WEIGHT		B.A.
	U.S. GAL.	L	LB	KG	IN.
Nose Gear Oleo	2.4	9.1	16.7	7.6	147.5
Main Gear Oleo	20.0	75.7	139.6	63.6	1039.3

NOTE Hydraulic fluid density used is 6.98 LB/U.S. GAL. (0.836 KG/L). (Reference MIL-H-5606 or MIL-H-6083)

The following table lists the weight of nitrogen in the landing gear struts and tires. The balance arms are for the landing gear in the extended (taxi) position:

ITEM	WEIGHT		B.A.
	LB	KG	IN.
Nose Gear Strut	0.3	0.1	149.0
Main Gear Struts	3.4	1.5	1039.0
Total	3.7	1.6	966.8
Nose Gear Tires	8.0	3.6	150.5
Main Gear Tires	64.0	29.0	1045.3
Total	72.0	32.6	945.9

OPERATING SYSTEM FLUID

The following table provides operating systems fluid totals:

SYSTEM	VOLUME		WEIGHT		B.A.
	U.S. GAL.	L	LB	KG	IN.
Pneumatic Starter Oil	0.8	3.0	6.7	3.0	863.5
Aux. Power Unit	1.6	6.1	13.4	6.1	1989.0

NOTE Oil density used is 8.35 LB/U.S. GAL. (1.00 KG/L).

APPLICABLE CONFIGURATIONS
All

-BOEING PROPRIETARY-

POTABLE WATER SYSTEM

TANK QUANTITIES AND LOCATIONS

The drinking, washing and lavatory rinse water system has two storage tanks per airplane. The total usable potable water and supply lines are listed in the table below.

SYSTEM	VOLUME OF WATER		WEIGHT		B.A.
	U.S. GAL.	L	LB	KG	IN.
Right Main Tank	109.0	412.6	909.1	412.2	1704.0
Auxiliary Tank	40.0	151.4	333.6	151.2	1581.0
Lines	5.9	22.3	49.2	22.3	893.0
Total	154.9	586.3	1291.9	585.7	1641.3

NOTE Density used is 8.34 LB/U.S. GAL. (0.999 KG/L).

APPLICABLE CONFIGURATIONS
All

-BOEING PROPRIETARY-

WASTE DISPOSAL SYSTEM

TANK QUANTITIES AND LOCATIONS

The forward waste tank has a capacity of 58 gallons (219 liters) and the aft waste has a capacity of 58 gallons (219 liters). An initial charge of disinfectant is located in each of the waste tanks as listed below.

SYSTEM	VOLUME		WEIGHT		B.A. IN.
	U.S. GAL.	L	LB	KG	
Forward Tank	6.0	22.7	50.0	22.7	1688.8
Aft Tank	6.0	22.7	50.0	22.7	1719.3
Total	12.0	45.4	100.0	45.4	1704.1

NOTE Density used is 8.34 LB/U.S. GAL. (0.999 KG/L).

APPLICABLE CONFIGURATIONS
All

-BOEING PROPRIETARY-

PASSENGER AND PERSONNEL WEIGHT ALLOWANCES

FAA ADVISORY CIRCULAR 120-27E ALLOWANCES

The following crew, passenger and baggage weights reflect the Federal Aviation Administration (FAA) Advisory Circular 120-27E, dated June 10, 2005.

Flight Crew

For flight crew members:

- Flight crew member 190 LB (86.2 KG)
- Pilot flight bag 20 LB (9.1 KG)
- Crewmember roller bag 30 LB (13.6 KG)

Cabin Crew

For cabin attendants:

- Cabin attendant 170 LB (77.1 KG)
- Flight attendant kit 10 LB (4.5 KG)
- Crewmember roller bag 30 LB (13.6 KG)

Passengers

The Advisory Circular 120-27E specifies an average passenger weight of 195 LB (88.5 KG) which consists of a 179 LB (81.2 KG) passenger weight plus 16 LB (7.3 KG) carry-on baggage and personal items. The combination of average passenger weight, seat weight and passenger carry-on baggage stowed under the seat must not exceed the main cabin floor linear loading limits (see CHP-SEC 1-60-00x).

Baggage

The following average weights apply to passenger checked baggage:

- Use an average weight of not less than 30 LB (13.6 KG) for each piece of checked baggage.

NOTE Use of average passenger and baggage weights is not advisable in computing the weight and balance of charter flights or other special services involving the carriage of special groups (e.g. athletic squads, military groups, etc.). Refer to Advisory Circular 120-27E.

APPLICABLE CONFIGURATIONS
All

-BOEING PROPRIETARY-

INTERIOR ARRANGEMENT - MAIN DECK

FLIGHT DECK

The flight crew balance arms are defined as 6 IN. in front of the Seat Reference Point (SRP). The SRP is defined as the intersection of the seat bottom and the seat back. The crew locations represent the crew seated at takeoff positions.

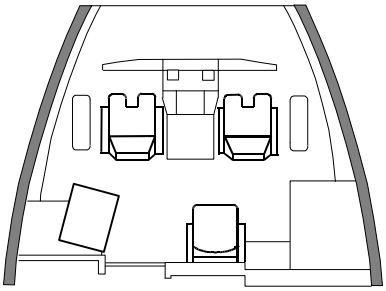

FLIGHT CREW (TWO OBSERVERS)	
LOCATION	**B.A. IN.**
Captain	60.1
First Officer	60.1
First Observer (Wall mounted)	104.9
Second Observer (If installed)	99.0

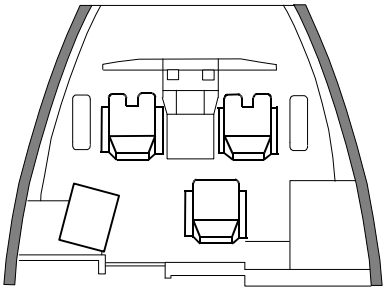

FLIGHT CREW (TWO OBSERVERS)	
LOCATION	**B.A. IN.**
Captain	60.1
First Officer	60.1
First Observer (Track mounted)	99.0
Second Observer (If installed)	99.0

APPLICABLE CONFIGURATIONS
Refer to the Interior Effectivity section of this manual to correlate certified Passenger Arrangements with specific aircraft serial numbers.

-BOEING PROPRIETARY-

INTERIOR ARRANGEMENT - MAIN DECK (Continued)

MAIN CABIN - 36C/187Y ARRANGEMENT

The main cabin 36C/187Y arrangement shown below is the basis for the subsequent passenger and cabin crew center of gravity data.

Reference Drawing(s):

LOPA-673-398

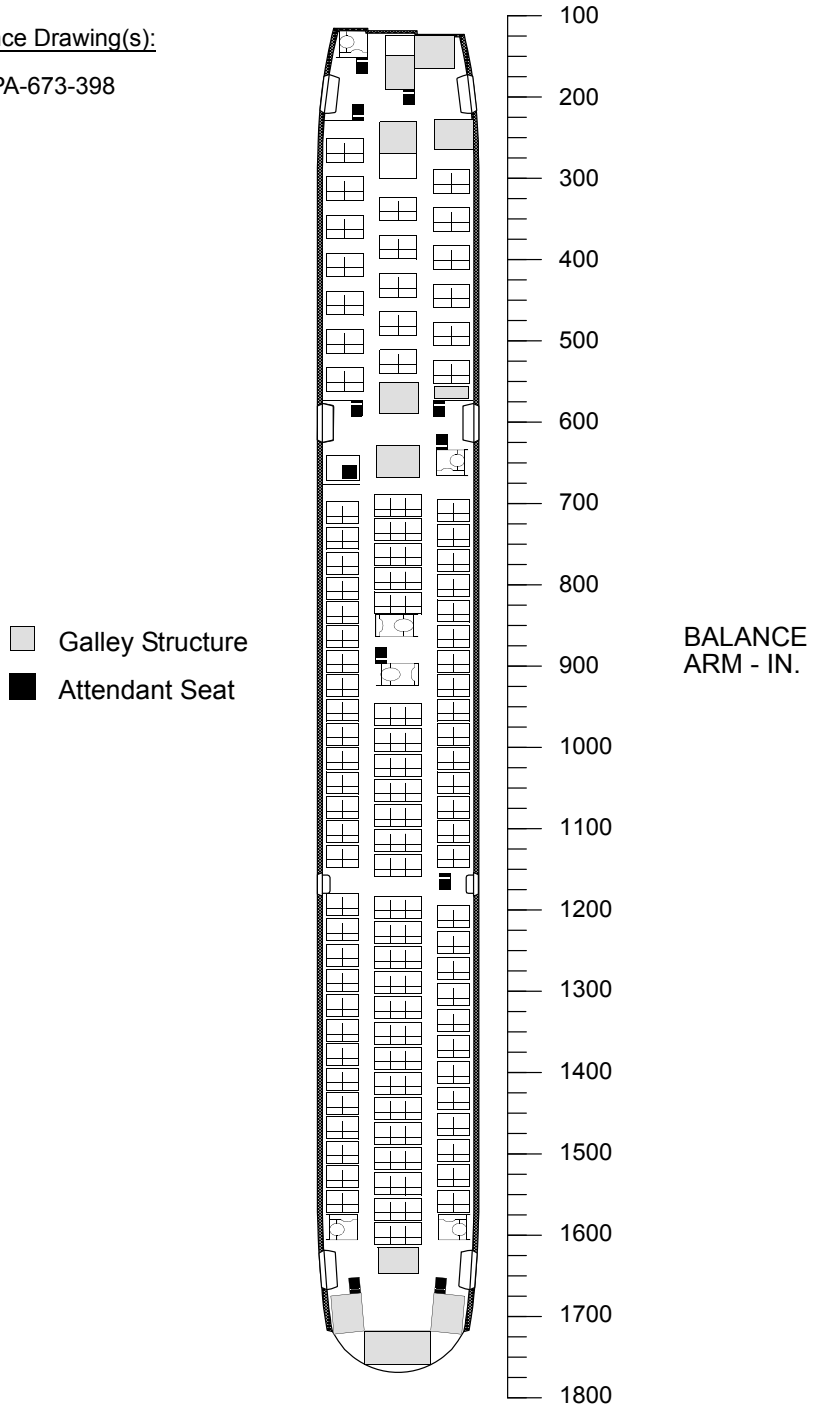

APPLICABLE CONFIGURATIONS
Refer to the Interior Effectivity section of this manual to correlate certified Passenger Arrangements with specific aircraft serial numbers.

-BOEING PROPRIETARY-

INTERIOR ARRANGEMENT - MAIN DECK (Continued)

Passenger Locations

The center of gravity of each passenger location for the main cabin arrangement on page 2 is listed in the following table. The class designations are as follows: First Class (F), Business Class (C) and Tourist Class (Y). Unless otherwise noted, the passenger balance arms are defined as 8 IN. behind the forward seat pin, relative to the seat. The balance arms represent the passengers seated in an upright position.

CLASS	ROW	PASSENGERS					
		LEFT		CENTER		RIGHT	
		NO.	B.A. IN.	NO.	B.A. IN.	NO.	B.A. IN.
C	1	2	262				
	2	2	309			2	300
	3	2	356	2	334	2	347
	4	2	403	2	381	2	394
	5	2	450	2	428	2	441
	6	2	497	2	475	2	488
	7	2	544	2	522	2	535
Y	8	2	708	3	699	2	705
	9	2	739	3	729	2	736
	10	2	770	3	759	2	767
	11	2	801	3	789	2	798
	12	2	831	3	819	2	829
	13	2	861			2	860
	14	2	891			2	891
	15	2	921			2	921
	16	2	951	3	957	2	951
	17	2	981	3	988	2	981
	18	2	1011	3	1019	2	1011
	19	2	1041	3	1050	2	1041
	20	2	1071	3	1081	2	1071
	21	2	1101	3	1112	2	1101
	22	2	1131	3	1143	2	1131
	23	2	1191	3	1194	2	1206
	24	2	1222	3	1225	2	1238
	25	2	1253	3	1256	2	1270
	26	2	1284	3	1287	2	1302
	27	2	1315	3	1318	2	1334
	28	2	1346	3	1349	2	1366
	29	2	1376	3	1380	2	1398
	30	2	1406	3	1411	2	1430
	31	2	1436	3	1442	2	1462
	32	2	1466	3	1473	2	1494
	33	2	1496	3	1504	2	1525
	34	2	1526	3	1535		
	35	2	1556	3	1566	2	1556
	36			3	1596		

APPLICABLE CONFIGURATIONS

Refer to the Interior Effectivity section of this manual to correlate certified Passenger Arrangements with specific aircraft serial numbers.

-BOEING PROPRIETARY-

INTERIOR ARRANGEMENT - MAIN DECK (Continued)

Cabin Crew Locations

The cabin crew balance arms are defined as 6 IN. in front of the Seat Reference Point (SRP). The SRP is defined as the intersection of the seat bottom and the seat back. The cabin crew locations represent the crew seated at takeoff positions for the main cabin arrangement shown on page 2.

CABIN CREW			
GENERAL LOCATION	NUMBER OF ATTENDANTS		B.A. IN.
	LEFT	RIGHT	
Fwd Cabin	1		173
Fwd Cabin		1	200
Fwd Cabin	1		218
Mid Cabin	1	1	584
Mid Cabin		1	625
Purser Station	1		651
Mid Cabin	1		887
Mid Cabin		1	1165
Aft Cabin	1	1	1663

APPLICABLE CONFIGURATIONS
Refer to the Interior Effectivity section of this manual to correlate certified Passenger Arrangements with specific aircraft serial numbers.

-BOEING PROPRIETARY-

GALLEY WEIGHTS - FIXED POSITIONS

MAXIMUM ALLOWABLE GALLEY WEIGHTS - MAIN DECK

A generic layout of the 767-300/300ER with galleys shaded is shown below. All galleys are grouped into: Forward -- Mid-Fwd -- Mid-Aft -- Aft with respective center and side galleys.

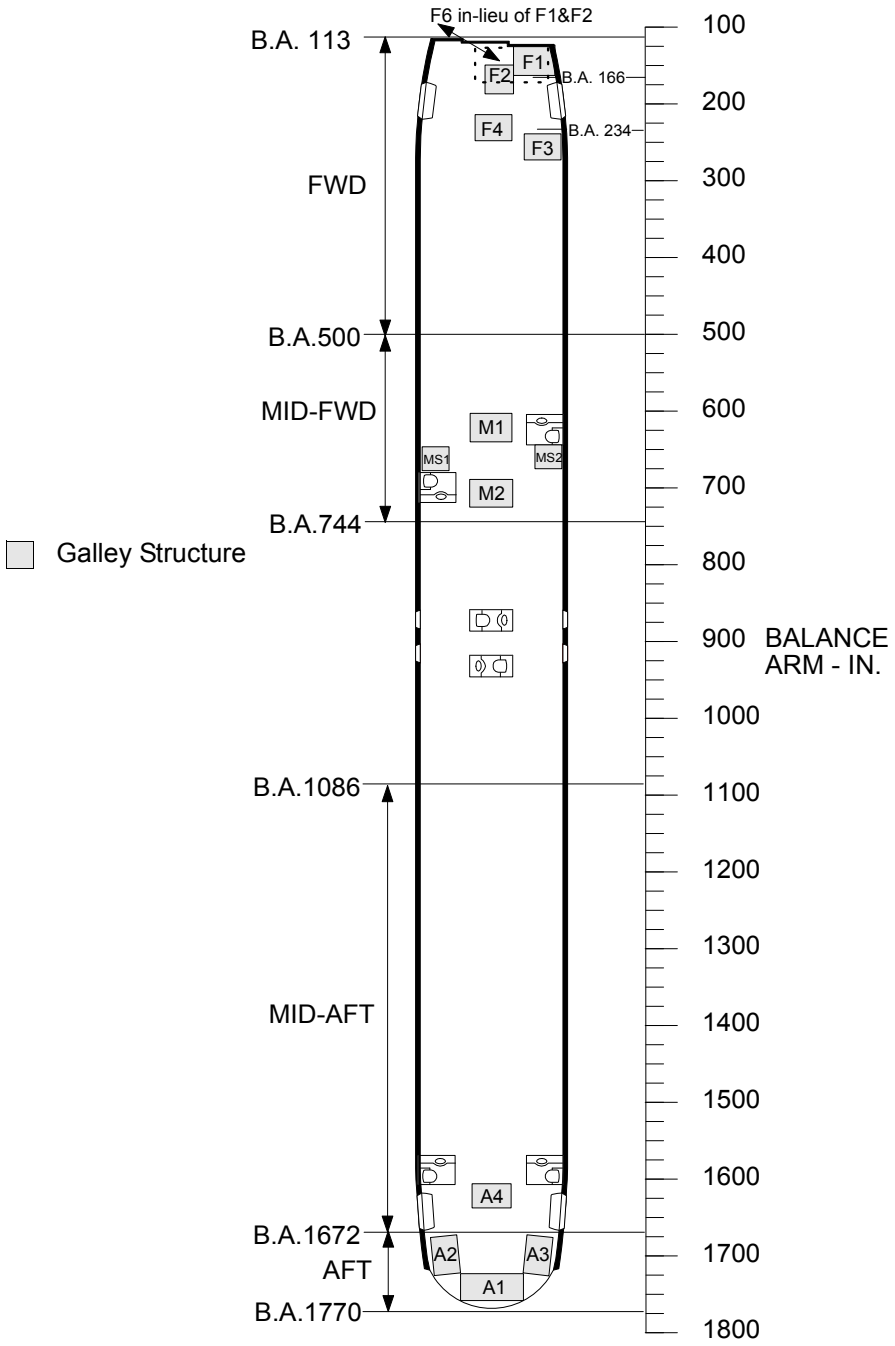

APPLICABLE CONFIGURATIONS
All

-BOEING PROPRIETARY-

GALLEY WEIGHTS - FIXED POSITIONS (Continued)

For purposes of calculating forward/aft body loading limits, the actual installed galley weights should be used. In the absence of actual galley weights, the following weights may be assumed.

MAXIMUM ALLOWABLE FORWARD GALLEY WEIGHTS		
GALLEY UNIT NUMBER	LB EACH	KG EACH
F1	2000	907
F2	1600	725
F3	1450	657
F4	1900	861
F6	3000	1360

MAXIMUM ALLOWABLE MID-FWD CENTER & SIDEWALL GALLEY WEIGHTS		
GALLLEY UNIT NUMBER	LB EACH	KG EACH
M1	2000	907
M2	2000	907
MS1	800	362
MS2	800	362

MAXIMUM ALLOWABLE MID-AFT GALLEY WEIGHTS		
GALLEY UNIT NUMBER	LB	KG
A4	2000	907

APPLICABLE CONFIGURATIONS
All

-BOEING PROPRIETARY-

GALLEY WEIGHTS - FIXED POSITIONS (Continued)

MAXIMUM ALLOWABLE AFT GALLEY WEIGHTS		
GALLEY UNIT NUMBER	LB EACH	KG EACH
A1	3600	1632
A2	2110	957
A3	2110	957

NOTES

- Galleys installed on this airplane may be further limited by the carrier and contents weight as shown on the galley capacity placards. The specific galley capacity weight is placarded on the interior wall of the galley.
- The galley weights shown in the table above do not represent structural allowables, and are to be used for calculating the cumulative body load only. This calculation is performed in section 1-60-40x for the Forward Body Cumulative Loads and 1-60-60x for Aft Body Cumulative Loads.
- These weights do not include Lavatories, Closets, or Crew Rests.

APPLICABLE CONFIGURATIONS
All

-BOEING PROPRIETARY-

CARGO COMPARTMENT LOAD LIMITS

MAXIMUM ALLOWABLE WEIGHTS

This section provides main deck and lower deck cargo compartment loading. These values are the maximum allowable weights that can be sustained by the basic monocoque structure.

The following illustration shows the configuration of the cargo compartments.

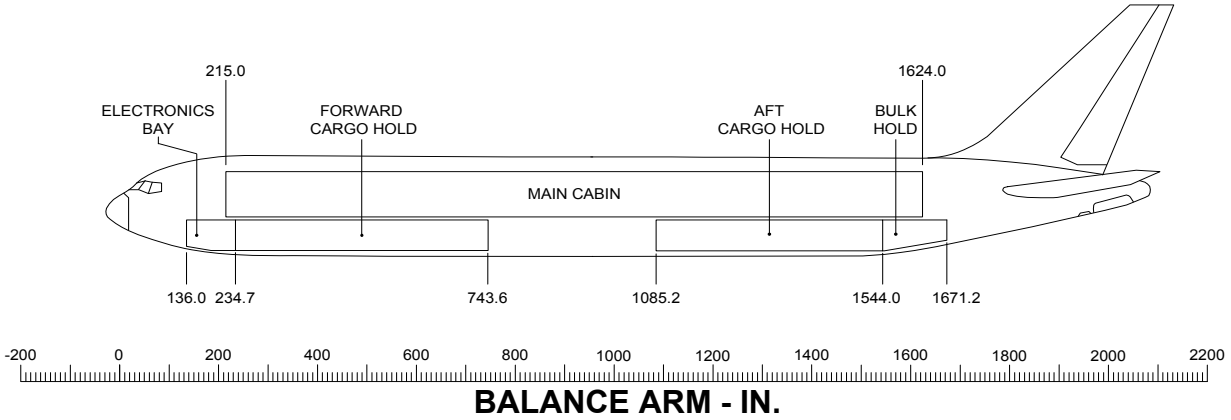

Four basic structural limitations that must be observed when loading payload are compartment, linear loading, floor loading, and cumulative load limitations. Cumulative load limitations are discussed in CHP-SEC 1-60-40x (forward body) and CHP-SEC 1-60-60x (aft body). Maximum allowable compartment weights, and maximum allowable linear and floor loading are provided in the following table:

MAXIMUM ALLOWABLE WEIGHT						
COMPARTMENT	TOTAL WEIGHT		FLOOR LOADING			
	LB	KG	LB/IN.	KG/IN.	LB/SQ FT	KG/SQ FT
Main Cabin B.A. 215.0 to B.A. 1624.0			53.3[a]	24.2[a]	100.0	45.4
Electronics Bay B.A. 136.0 to B.A. 234.7	3000	1360				
Forward Cargo Hold[b] B.A. 234.7 to B.A. 743.6	45000[c]	20411[c]	90.0[d]	40.8[d]	200.0	90.7
Aft Cargo Hold[b] B.A. 1085.2 to B.A. 1544.0	38745[e]	17574[e]	90.0	40.8	200.0	90.7
Bulk Hold B.A. 1544.0 to B.A. 1671.2	6450[f]	2925[f]	50.0	22.6	150.0	68.0

[a] The main cabin floor loading includes the weight of passengers, passenger seats, and passenger carry-on baggage stowed under the seats.
[b] The lower hold limitations include the weight of cargo and the unit load devices (ULDs).
[c] The maximum load limit is 43200 LB (19595 KG) with non-approved ULDs or bulk cargo (refer to CHP-SEC 1-66-2xx).
[d] Capability can be increased to 134.0 LB/IN (60.7 KG/IN) provided all weight above 90.0 LB/IN (40.8 KG/IN) is tied down. (Refer to CHP-SEC-1-68-00x)
[e] The maximum load limit is 37800 LB (17145 KG) with non-approved ULDs or bulk cargo (refer to CHP-SEC 1-66-6xx).
[f] The bulk cargo net at B.A. 1544 must be installed or the maximum allowable weight is 0 LB (0 KG).

CAUTION THESE LOADS MAY BE FURTHER LIMITED BY CUMULATIVE LOAD LIMITATIONS.

APPLICABLE CONFIGURATIONS
All

-BOEING PROPRIETARY-

CARGO COMPARTMENT LOAD LIMITS (Continued)

MAXIMUM COMBINED LINEAR LOAD LIMITS

Total loading for the main deck and lower deck cargo must not exceed the combined linear loading limits shown in the following diagram:

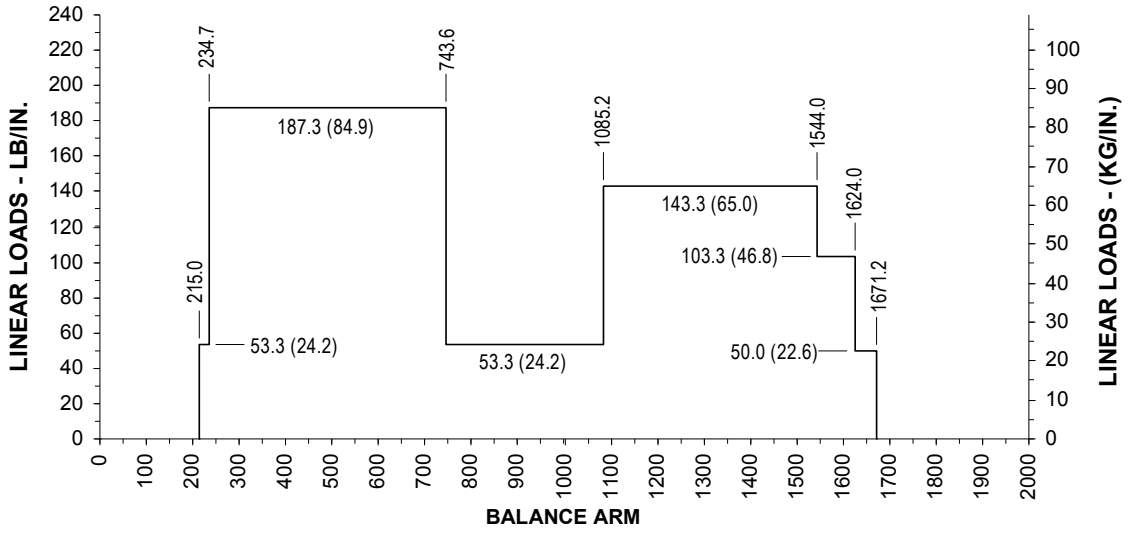

NOTE Cumulative loads are typically more restrictive than combined linear loads.

The main deck load is determined by adding the weight of a row of seats and passengers, with carry-on baggage, and dividing by the seat pitch.

Example:

With a seven abreast configuration consisting of two double seats at 80 LB (36 KG) each and a 115 LB (52 KG) triple seat with a passenger weight of 185 LB (84 KG) and a 33 inch seat pitch, the resulting load would be 47.6 LB/IN. (21.6 KG/IN.). The calculation using pounds is as follows:

$$\frac{80\ \text{LB} + 80\ \text{LB} + 115\ \text{LB} + (7 \times 185\ \text{LB})}{33\ \text{IN.}} = 47.6\ \text{LB/IN.}$$

Similarly, the calculation using kilograms is:

$$\frac{36\ \text{KG} + 36\text{KG} + 52\text{KG} + (7 \times 84\text{KG})}{33\ \text{IN.}} = 21.6\ \text{KG/IN.}$$

APPLICABLE CONFIGURATIONS
All

-BOEING PROPRIETARY-

CERTIFIED UNIT LOAD DEVICE WEIGHTS BY POSITION

UNIT LOAD DEVICE POSITIONS - LOWER DECK

The following diagram illustrates the unit load device positions:

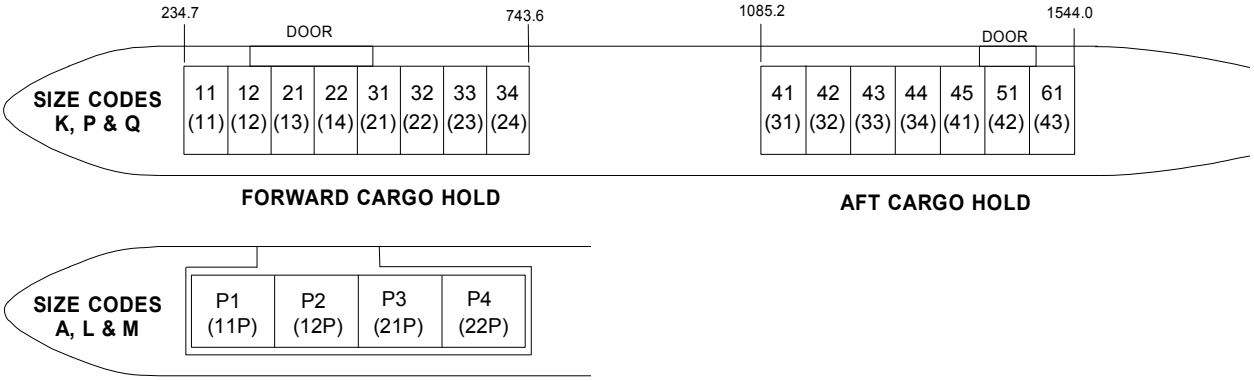

NOTE Position markings contained within parenthesis ( ) are equivalent IATA markings.

Certified unit load device (ULD) weights represent the maximum weight that a specified ULD may carry. The allowable weight for a ULD may be further restricted by other factors; refer to the following subjects for additional information:

- CHP-SEC 1-60-40x and 1-60-60x for forward and aft body cumulative loads, respectively
- CHP-SEC 1-64-xxx for allowable unit load device locations
- CHP-SEC 1-66-xxx for missing/inoperative restraint data and other loading considerations
- CHP-SEC 1-68-00x for tiedown requirements

Size Codes K, P and Q

Certified weights for unit load device size codes K, P and Q are provided in the following table:

DESIGNATION		CERTIFIED WEIGHT					
		FORWARD HOLD				AFT HOLD	
SIZE CODE	COMMON	WITHOUT TIEDOWNS		WITH TIEDOWNS		ALL POSITIONS	
		LB	KG	LB	KG	LB	KG
K	LD-1	3500	1587	5155	2338	3500	1587
	LD-3	3500	1587	5155	2338	3500	1587
P	LD-2	2700	1224	3940	1787	2700	1224
Q	LD-4	5400	2449	8050	3651	5400	2449
	LD-8	5400	2449	8050	3651	5400	2449

APPLICABLE CONFIGURATIONS
All

-BOEING PROPRIETARY-

CERTIFIED UNIT LOAD DEVICE WEIGHTS BY POSITION (Continued)

Size Codes A, L and M

Certified weights for unit load device size codes A, L and M are provided in the following table:

DESIGNATION		CERTIFIED WEIGHT - FORWARD HOLD			
SIZE CODE	COMMON	WITHOUT TIEDOWNS		WITH TIEDOWNS	
		LB	KG	LB	KG
A	LD-7	11250	5102	15275	6928
	LD-9	11250	5102	15275	6928
	P1	11250	5102	15275	6928
L[a]	LD-5	7000	3175	10485	4755
	LD-10	7000	3175	10485	4755
	LD-11	7000	3175	10485	4755
	Half Pallet	7000	3175	10485	4755
M	P6	11250	5102	16665	7559

[a] Size Code L less than 63 inches in height have a maximum allowable load of 5000 LB (2267 KG).

APPLICABLE CONFIGURATIONS
All

-BOEING PROPRIETARY-

FORWARD BODY CUMULATIVE LOADS

CUMULATIVE LOAD CHECK

The forward body main deck loading may require a reduction in the allowable loading for the forward cargo hold to ensure that the maximum cumulative load limitations are not exceeded. Allowable forward hold loading must be determined using the tables found under the “Allowable Loads” heading in this subject. Refer to the procedure below for instructions on calculating the allowable loading.

NOTE Data presented in this subject may only be used to ensure compliance with the maximum cumulative load limitations and does not necessarily imply local structural capability for galley weights or the passengers and seats. Structural capability for galley installations must be in accordance with Sections 1-48-00x, “Maximum Galley Weights”. Furthermore, each galley installation’s placard limit weight must not be exceeded.

Procedure for Checking Cumulative Loads

The following procedure should be used to determine allowable forward hold loading.

1. Determine the weight of the forward galley complex. This weight must include each of the following items forward of B.A. 500: galley structure, inserts, food and beverage; floor mounted storage and closets; crew rests; the F1 lavatory, if installed; and attendants and attendant stations supported by the galley or lavatory structure. Forward of B.A. 166, the maximum allowable weight is 3600 LB (1632 KG). Forward of B.A. 234, the maximum allowable weight is 6095 LB (2764 KG).
2. Determine the weight of the mid forward galley complex that is between B.A. 500 and B.A. 744. This weight must include: galley structure, inserts, food and beverage; floor mounted storage and closets; crew rests; attendants and attendant stations supported by the galley structure.

NOTES
- Items listed in steps 1 or 2 that do not fall within the range specified do not need to be included in the galley complex weight.
- Attendants and attendant stations not supported by galley or lavatory structure should be included in step 3.

3. Determine the weight of passengers, carry-on baggage, attendants and seats. This weight must include each of the following items forward of Balance Arm 744: passengers and carry on baggage; seats and all items attached to the seats (e.g. seat belt, food service tray, wiring, connectors, individual video or telecommunication system, magazines, etc); and attendants and attendant stations not already included in the galley complex weights.
4. Using the tables found under the “Allowable Loads” heading in this subject along with the weights from steps 1 through 3, calculate the allowable cumulative load for each given balance arm. Linearly interpolate between table values if the weights from steps 1 through 3 are not equal to the weights in the table. Multiple linear interpolations may be required to calculate the forward hold allowable cumulative loading.
5. Alternatively to step 4, forward hold loading may be determined directly by using the next higher table weights than those weights calculated in steps 1 through 3 to look up the corresponding cumulative loading for each balance arm. Note however, that this method may result in a more restrictive allowable loading than the method described in step 4.

APPLICABLE CONFIGURATIONS
All

-BOEING PROPRIETARY-

FORWARD BODY CUMULATIVE LOADS (Continued)

6. Using linear interpolation to calculate the allowable cumulative load at the aft face of each ULD position, check to ensure cumulative loads are not exceeded at these intermediate balance arms (refer to CHP-SEC 1-64-0xx for ULD positions).

ALLOWABLE LOADS

Forward hold allowable cumulative loading as a function of main deck loading is shown below (pounds):

GALLEY COMPLEX WEIGHT - LB		B.A. IN.	PASSENGERS, CARRY-ON BAGGAGE, ATTENDANTS, AND SEATS - LB					
FWD DOOR	MID FORWARD		8000	12000	16000	20000	24000	28000
			ALLOWABLE CUMULATIVE LOAD FWD OF GIVEN B.A.					
2000	0	313	7110	7110	7110	7110	7110	7110
		490	23040	23040	23040	23040	23040	23040
		744	45000	45000	44890	40890	36890	32890
	2900	313	7110	7110	7110	7110	7110	7110
		490	23040	23040	23040	23040	23040	23040
		744	45000	45000	41990	37990	33990	29990
	5800	313	7110	7110	7110	7110	7110	7110
		490	23040	23040	23040	23040	23040	23040
		744	45000	43090	39090	35090	31090	27090
	8600	313	7110	7110	7110	7110	7110	7110
		490	23040	23040	23040	23040	23040	23040
		744	44290	40290	36290	32290	28290	24290
4000	0	313	7110	7110	7110	7110	7110	7110
		490	23040	23040	23040	23040	23040	23040
		744	45000	45000	42890	38890	34890	30890
	2900	313	7110	7110	7110	7110	7110	7110
		490	23040	23040	23040	23040	23040	23040
		744	45000	43990	39990	35990	31990	27990
	5800	313	7110	7110	7110	7110	7110	7110
		490	23040	23040	23040	23040	23040	23040
		744	45000	41090	37090	33090	29090	25090
	8600	313	7110	7110	7110	7110	7110	7110
		490	23040	23040	23040	23040	23040	22040
		744	42290	38290	34290	30290	26290	22290
6000	0	313	7110	7110	7110	7110	7110	7110
		490	23040	23040	23040	23040	23040	23040
		744	45000	44890	40890	36890	32890	28890
	2900	313	7110	7110	7110	7110	7110	7110
		490	23040	23040	23040	23040	23040	23040
		744	45000	41990	37990	33990	29990	25990
	5800	313	7110	7110	7110	7110	7110	7110
		490	23040	23040	23040	23040	23040	23040
		744	43090	39090	35090	31090	27090	23090
	8600	313	7110	7110	7110	7110	7110	7110
		490	23040	23040	23040	23040	23040	20290
		744	40290	36290	32290	28290	24290	20290

APPLICABLE CONFIGURATIONS
All

-BOEING PROPRIETARY-

FORWARD BODY CUMULATIVE LOADS (Continued)

GALLEY COMPLEX WEIGHT - LB		B.A. IN.	PASSENGERS, CARRY-ON BAGGAGE, ATTENDANTS, AND SEATS - LB					
FWD DOOR	MID FORWARD		8000	12000	16000	20000	24000	28000
			ALLOWABLE CUMULATIVE LOAD FWD OF GIVEN B.A.					
8400	0	313	7110	7110	7110	7110	6880	6880
		490	23040	23040	23040	23040	22120	21280
		744	45000	42490	38490	34490	30490	24690
	2900	313	7110	7110	7110	7110	6880	6880
		490	23040	23040	23040	23040	22120	21280
		744	43590	39590	35590	31590	27590	23590
	5800	313	7110	7110	7110	7110	6880	6880
		490	23040	23040	23040	23040	22120	20690
		744	40690	36690	32690	28690	24690	20690
	8600	313	7110	7110	7110	7110	6880	6880
		490	23040	23040	23040	23040	21890	17890
		744	37890	33890	29890	25890	21890	17890

Forward hold allowable cumulative loading as a function of main deck loading is shown below (kilograms):

GALLEY COMPLEX WEIGHT - KG		B.A. IN.	PASSENGERS, CARRY-ON BAGGAGE, ATTENDANTS, AND SEATS - KG					
FWD DOOR	MID FORWARD		3629	5443	7257	9072	10886	12701
			ALLOWABLE CUMULATIVE LOAD FWD OF GIVEN B.A.					
907	0	313	3225	3225	3225	3225	3225	3225
		490	10450	10450	10450	10450	10450	10450
		744	20411	20411	20361	18547	16733	14918
	1315	313	3225	3225	3225	3225	3225	3225
		490	10450	10450	10450	10450	10450	10450
		744	20411	20411	19046	17231	15417	13603
	2631	313	3225	3225	3225	3225	3225	3225
		490	10450	10450	10450	10450	10450	10450
		744	20411	19545	17730	15916	14102	12287
	3901	313	3225	3225	3225	3225	3225	3225
		490	10450	10450	10450	10450	10450	10450
		744	20089	18275	16460	14646	12832	11017
1814	0	313	3225	3225	3225	3225	3225	3225
		490	10450	10450	10450	10450	10450	10450
		744	20411	20411	19454	17640	15825	14011
	1315	313	3225	3225	3225	3225	3225	3225
		490	10450	10450	10450	10450	10450	10450
		744	20411	19953	18139	16324	14510	12696
	2631	313	3225	3225	3225	3225	3225	3225
		490	10450	10450	10450	10450	10450	10450
		744	20411	18638	16823	15009	13195	11380
	3901	313	3225	3225	3225	3225	3225	3225
		490	10450	10450	10450	10450	10450	9997
		744	19181	17368	15553	13739	11924	10110

APPLICABLE CONFIGURATIONS
All

-BOEING PROPRIETARY-

FORWARD BODY CUMULATIVE LOADS (Continued)

GALLEY COMPLEX WEIGHT - KG		B.A. IN.	PASSENGERS, CARRY-ON BAGGAGE, ATTENDANTS, AND SEATS - KG					
FWD DOOR	MID FORWARD		3629	5443	7257	9072	10886	12701
			ALLOWABLE CUMULATIVE LOAD FWD OF GIVEN B.A.					
2722	0	313	3225	3225	3225	3225	3225	3225
		490	10450	10450	10450	10450	10450	10450
		744	20411	20361	18547	16733	14918	13104
	1315	313	3225	3225	3225	3225	3225	3225
		490	10450	10450	10450	10450	10450	10450
		744	20411	19046	17231	15417	13603	11788
	2631	313	3225	3225	3225	3225	3225	3225
		490	10450	10450	10450	10450	10450	10450
		744	19545	17730	15916	14102	12287	10473
	3901	313	3225	3225	3225	3225	3225	3225
		490	10450	10450	10450	10450	10450	9203
		744	18275	16460	14646	12832	11017	9203
3810	0	313	3225	3225	3225	3225	3120	3120
		490	10450	10450	10450	10450	10033	9652
		744	20411	19273	17458	15644	13830	11199
	1315	313	3225	3225	3225	3225	3120	3120
		490	10450	10450	10450	10450	10033	9652
		744	19772	17957	16143	14328	12514	10700
	2631	313	3225	3225	3225	3225	3120	3120
		490	10450	10450	10450	10450	10033	9384
		744	18456	16642	14827	13013	11199	9384
	3901	313	3225	3225	3225	3225	3120	3120
		490	10450	10450	10450	10450	9929	8114
		744	17186	15372	13557	11743	9929	8114

APPLICABLE CONFIGURATIONS
All

-BOEING PROPRIETARY-

FORWARD BODY CUMULATIVE LOADS (Continued)

SAMPLE CUMULATIVE LOAD CHECK

A 767 is configured as shown in the illustration below. For this sample problem, first class seats are assumed to weigh 130 LB (59.0 KG) per seat bottom and business class seats are assumed to weigh 90 LB (40.8 KG) per seat bottom. Passengers with carry-on baggage weigh 185 LB (83.9 KG) each. Individual galley complex component weights are tabulated at the appropriate step. Size code P containers will be carried in the forward and aft compartments.

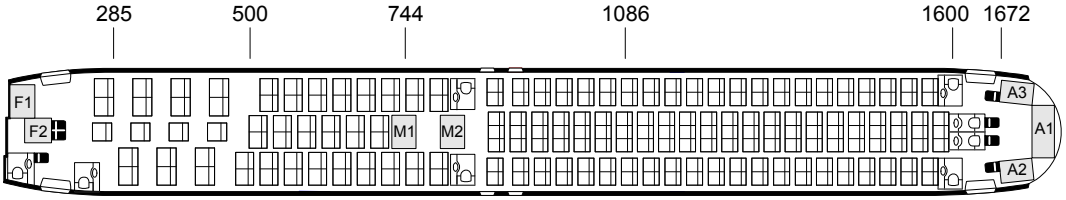

SAMPLE INTERIOR ARRANGEMENT

Step 1:

Determine the weight of the forward galley complex. For this example, the sample weights reflect typical weights for similar installations. The results are tabulated in the table below:

FORWARD GALLEY COMPLEX WEIGHT CALCULATIONS						
ITEMS FORWARD OF B.A. 500	TOTAL COMPLEX		FWD OF B.A. 166		FWD OF B.A. 234	
	LB	KG	LB	KG	LB	KG
F1 Galley Structure and Contents	2000	907	2000	907	2000	907
F2 Galley Structure and Contents	1580	717	680	309	1580	717
Floor Mounted Storage & Closets	100	45	100	45	100	45
Attendants and Attendant Stations	465	211	155	70	465	211
F1 Lavatory	250	113	250	113	250	113
TOTAL GALLEY COMPLEX	**4395**	**1993**	**3185[a]**	**1444[a]**	**4395[b]**	**1993[b]**

[a] The total weight of items forward of balance arm 166 must be 3600 LB (1632 KG) or less.
[b] The total weight of items forward of balance arm 234 must be 6095 LB (2674 KG) or less.

Step 2:

Determine the weight of the mid forward galley complex. For this example, the sample weights reflect typical weights for similar installations. The results are tabulated in the table below

MID FORWARD GALLEY COMPLEX WEIGHT CALCULATION		
ITEMS BETWEEN B.A. 500 AND B.A. 744	LB	KG
M1 Galley Structure and Contents	1740	789
Floor Mounted Storage & Closets	0	0
Attendants and Attendant Stations	0	0
TOTAL MID FORWARD GALLEY COMPLEX	**1740**	**789**

APPLICABLE CONFIGURATIONS
All

-BOEING PROPRIETARY-

FORWARD BODY CUMULATIVE LOADS (Continued)

Step 3:

Determine the weight of passengers, carry on baggage and seats forward of Balance Arm 744. The calculation results are summarized in the table below:

PASSENGERS, CARRY ON BAGGAGE, ATTENDANTS AND SEATS WEIGHT CALCULATION					
ITEMS FORWARD OF B.A. 744	QUANTITY	WEIGHT EACH		TOTAL WEIGHT	
		LB	KG	LB	KG
First Class Seat Bottom	18	130	59.0	2340	1062
Business Class Seat Bottom	38	90	40.8	3420	1550
Passengers and Carry-On Baggage	56	185	83.9	10360	4698
Attendants and Attendant Stations	0	155	70.3	0	0
TOTAL PASSENGERS, CARRY ON BAGGAGE, ATTENDANTS AND SEATS				**16120**	**7310**

Step 4:

Using the tables found under the “Allowable Loads” heading in this subject along with the weights from steps 1 through 3, calculate the allowable cumulative load for each given balance arm. From steps 1 through 3, the weights are:

- The forward door galley complex - 4395 LB (1993 KG)
- The mid forward galley complex - 1740 LB (789 KG)
- The passengers, carry on baggage, attendants and seats - 16120 LB (7310 KG)

Referring to the tables in the “Allowable Loads” section of this subject (starting on page 2):

- The forward door galley complex weight of 4395 LB (1993 KG) is bracketed in the tables by values of 4000 LB (1814 KG) and 6000 LB (2722 KG).
- The mid forward galley complex weight of 1740 LB (789 KG) is bracketed in the tables by values of 0 LB (0 KG) and 2900 LB (1315 KG).
- The passengers, carry on baggage, attendants and seats weight of 16120 LB (7310 KG) is bracketed in the tables by values of 16000 LB (7257 KG) and 20000 LB (9072 KG).

The following table summarizes the allowable cumulative loads forward of B.A. 313 for each of the bracketing values. Since all allowable cumulative loads are equivalent, no reduction in allowable loading is required forward of B.A. 313.

GALLEY COMPLEX WEIGHT				PASSENGERS, CARRY ON BAGGAGE, ATTENDANTS, AND SEATS		ALLOWABLE CUMULATIVE LOAD FWD OF B.A. 313	
FWD DOOR		MID FORWARD					
LB	KG	LB	KG	LB	KG	LB	KG
4000	1814	0	0	16000	7257	7110	3225
6000	2722	0	0	16000	7257	7110	3225
4000	1814	2900	1315	16000	7257	7110	3225
6000	2722	2900	1315	16000	7257	7110	3225
4000	1814	0	0	20000	9072	7110	3225
6000	2722	0	0	20000	9072	7110	3225
4000	1814	2900	1315	20000	9072	7110	3225
6000	2722	2900	1315	20000	9072	7110	3225

APPLICABLE CONFIGURATIONS
All

-BOEING PROPRIETARY-

FORWARD BODY CUMULATIVE LOADS (Continued)

The following table summarizes the allowable cumulative loads forward of B.A. 490 for each of the bracketing values. Since all allowable cumulative loads are equivalent, no reduction in allowable loading is required forward of B.A. 490.

GALLEY COMPLEX WEIGHT				PASSENGERS, CARRY ON BAGGAGE, ATTENDANTS, AND SEATS		ALLOWABLE CUMULATIVE LOAD FWD OF B.A. 490	
FWD DOOR		MID FORWARD					
LB	KG	LB	KG	LB	KG	LB	KG
4000	1814	0	0	16000	7257	23040	10450
6000	2722	0	0	16000	7257	23040	10450
4000	1814	2900	1315	16000	7257	23040	10450
6000	2722	2900	1315	16000	7257	23040	10450
4000	1814	0	0	20000	9072	23040	10450
6000	2722	0	0	20000	9072	23040	10450
4000	1814	2900	1315	20000	9072	23040	10450
6000	2722	2900	1315	20000	9072	23040	10450

The following table summarizes the allowable cumulative loads forward of B.A. 744 for each of the bracketing values. Since the allowable cumulative loads vary for the bracketing values, the actual allowable cumulative loads must be calculated using linear interpolation. The interpolation requires three stages. The first stage involves interpolation for the forward door galley complex. The results are shown in the table below:

GALLEY COMPLEX WEIGHT				PASSENGERS, CARRY ON BAGGAGE, ATTENDANTS, AND SEATS		ALLOWABLE CUMULATIVE LOAD FWD OF B.A. 744	
FWD DOOR		MID FORWARD					
LB	KG	LB	KG	LB	KG	LB	KG
4000	1814	0	0	16000	7257	42890	19454
4395	*1993*	*0*	*0*	*16000*	*7257*	*42495*	*19275*
6000	2722	0	0	16000	7257	40890	18547
4000	1814	2900	1315	16000	7257	39990	18139
4395	*1993*	*2900*	*1315*	*16000*	*7257*	*39595*	*17960*
6000	2722	2900	1315	16000	7257	37990	17231
4000	1814	0	0	20000	9072	38890	17640
4395	*1993*	*0*	*0*	*20000*	*9072*	*38495*	*17461*
6000	2722	0	0	20000	9072	36890	16733
4000	1814	2900	1315	20000	9072	35990	16324
4395	*1993*	*2900*	*1315*	*20000*	*9072*	*35595*	*16145*
6000	2722	2900	1315	20000	9072	33990	15417

The second stage involves using the interpolated results from the first stage, and interpolating between them for the mid forward galley complex. The results are shown in the table below:

GALLEY COMPLEX WEIGHT				PASSENGERS, CARRY ON BAGGAGE, ATTENDANTS, AND SEATS		ALLOWABLE CUMULATIVE LOAD FWD OF B.A. 744	
FWD DOOR		MID FORWARD					
LB	KG	LB	KG	LB	KG	LB	KG
4395	1993	0	0	16000	7257	42495	19275
		1740	*789*	*16000*	*7257*	*40755*	*18486*
		2900	1315	16000	7257	39595	17960
4395	1993	0	0	20000	9072	38495	17461
		1740	*789*	*20000*	*9072*	*36755*	*16671*
		2900	1315	20000	9072	35595	16145

APPLICABLE CONFIGURATIONS
All

-BOEING PROPRIETARY-

FORWARD BODY CUMULATIVE LOADS (Continued)

The final stage involves using the interpolated results from the second stage, and interpolating between them for the collective weight of the passengers, carry on baggage, attendants, and seats. The results are shown in the table below:

GALLEY COMPLEX WEIGHT				PASSENGERS, CARRY ON BAGGAGE, ATTENDANTS, AND SEATS		ALLOWABLE CUMULATIVE LOAD FWD OF B.A. 744	
FWD DOOR		MID FORWARD					
LB	KG	LB	KG	LB	KG	LB	KG
4395	1993	1740	789	16000	7257	40755	18486
				16120	*7310*	*40635*	*18433*
				20000	9072	36755	16671

The resulting allowable cumulative loading calculated using the interpolation method is summarized in the following table:

GALLEY COMPLEX WEIGHT				PASSENGERS, CARRY ON BAGGAGE, ATTENDANTS, AND SEATS		B.A. IN.	ALLOWABLE CUMULATIVE LOAD FWD OF GIVEN B.A.	
FWD DOOR		MID FORWARD						
LB	KG	LB	KG	LB	KG		LB	KG
4395	1993	1740	789	16120	7310	313	7110	3225
						490	23040	10450
						744	40635	18433

Step 5:

Alternatively to step 4, forward hold loading may be determined directly by using the next higher table weights than those weights calculated in steps 1 through 3 to look up the corresponding cumulative loading for each balance arm. The results for this method are shown in the following table:

GALLEY COMPLEX WEIGHT				PASSENGERS, CARRY ON BAGGAGE, ATTENDANTS, AND SEATS		B.A. IN.	ALLOWABLE CUMULATIVE LOAD FWD OF GIVEN B.A.	
FWD DOOR		MID FORWARD						
LB	KG	LB	KG	LB	KG		LB	KG
6000	2722	2900	1315	20000	9072	313	7110	3225
						490	23040	10450
						744	33990	15417

Note that this alternative method decreases the allowable cumulative load by 6645 LB (3014 KG) at balance arm 744 when compared to the interpolation method described in step 4.

APPLICABLE CONFIGURATIONS
All

-BOEING PROPRIETARY-

FORWARD BODY CUMULATIVE LOADS (Continued)

Step 6:

The following illustration shows the ULD positions for Size Code P containers (markings shown are IATA).

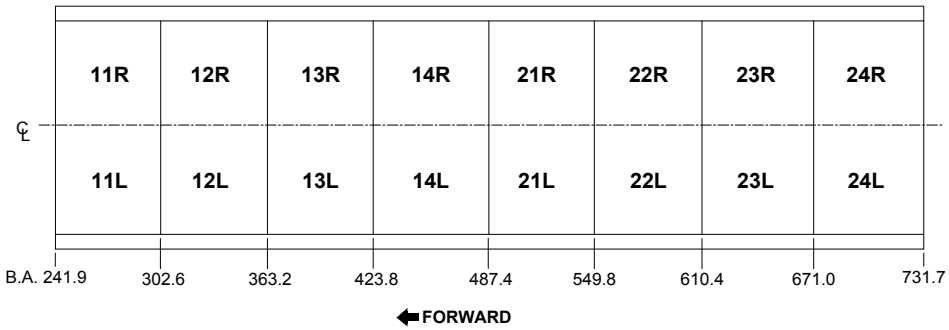

The weight for each ULD position in the forward hold must be checked to ensure cumulative loads are not exceeded at intermediate balance arms. The allowable cumulative load at the aft face of each ULD position is calculated using the allowable loads from step 4 and linearly interpolating for the intermediate balance arms. The sample results are shown in the following table:

SAMPLE CUMULATIVE LOAD CHECK - FORWARD BODY							
ULD POSITION	CARGO & ULD TARE (SAMPLE SIZE CODE P)		AFT ULD FACE B.A.	ACTUAL CUMULATIVE LOAD (SAMPLE)		ALLOWABLE CUMULATIVE LOAD	
	LB	KG		LB	KG	LB	KG
11L & 11R	3400	1542	302.6	3400	1542	6070	2753
12L & 12R	2800	1270	363.2	6200	2812	11628	5274
13L & 13R	3000	1361	423.8	9200	4173	17082	7748
14L & 14R	3300	1497	487.4	12500	5670	22806	10344
21L & 21R	2300	1043	549.8	14800	6713	27182	12329
22L & 22R	2400	1088	610.4	17200	7802	31380	14233
23L & 23R	2600	1179	671.0	19800	8981	35578	16137
24L & 24R	3300	1497	731.7	23100	10478	39782	18044

Since the actual cumulative load for this sample problem is less than the allowable cumulative load at each ULD position, no reduction in cargo loading is required. However, other loading limitations may be more restrictive. Refer to the following subjects for additional information:

- CHP-SEC 1-60-20x for certified unit load device weights
- CHP-SEC 1-64-xxx for allowable unit load device locations
- CHP-SEC 1-66-xxx for missing/inoperative restraint data and other loading considerations

Generally, it is not practical to determine allowable cumulative loading for each individual loading case. Alternatively, the cumulative load check may be eliminated by determining maximum allowable ULD position weights based on the allowable cumulative loading, and then ensuring that, in practice, the ULD position weights never exceed the calculated maximum. If an occasion occurs where a ULD position does exceed the calculated maximum, then the cumulative load check procedure must be followed to ensure that allowable cumulative loading is not exceeded.

APPLICABLE CONFIGURATIONS
All

-BOEING PROPRIETARY-

FORWARD BODY CUMULATIVE LOADS (Continued)

Maximum allowable position weights may be derived using a number of methods. For this example, a maximum allowable ULD weight will be derived that uniformly applies to Size Code P ULDs loaded in any position in the forward hold.

Using the allowable cumulative loading values from the “Sample Cumulative Load Check - Forward Body”, the maximum ULD weight is derived by dividing the allowable cumulative load at each aft face balance arm by the number of ULD positions forward of the balance arm. This calculation is repeated for each position’s aft face balance arm (i.e. table row). The resulting calculated maximum position weights are summarized in the following table:

DETERMINATION OF MAXIMUM ULD WEIGHTS						
ULD POSITION	SIZE CODE P ULDS		ALLOWABLE CUMULATIVE LOAD		MAXIMUM ULD WEIGHTS	
	AFT FACE B.A.	NO. FWD OF B.A.	LB	KG	LB	KG
11L & 11R	302.6	2	6070	2753	3035	1376
12L & 12R	363.2	4	11628	5274	2907	1318
13L & 13R	423.8	6	17082	7748	2847	1291
14L & 14R	487.4	8	22806	10344	2850	1292
21L & 21R	549.8	10	27182	12329	2718	1232
22L & 22R	610.4	12	31380	14233	2615	1186
23L & 23R	671.0	14	35578	16137	2541	1152
24L & 24R	731.7	16	39782	18044	2486	1127

The minimum result of 2486 LB (1127 KG) from the above table becomes the maximum allowable ULD weight for all positions in the forward hold. In conclusion, whenever the forward hold is loaded with Size Code P ULDs, and the weight of each ULD is limited to 2486 LB (1127 KG) or less, a cumulative load check is not required.

APPLICABLE CONFIGURATIONS
All

-BOEING PROPRIETARY-

AFT BODY CUMULATIVE LOADS

CUMULATIVE LOAD CHECK

The aft body main deck loading may require a reduction in the allowable loading for the aft cargo hold to ensure that the maximum cumulative load limitations are not exceeded. Allowable aft hold loading must be determined using the tables found under the “Allowable Loads” heading in this subject. Refer to the procedure below for instructions on calculating the allowable loading.

NOTE Data presented in this subject may only be used to ensure compliance with the maximum cumulative load limitations and does not necessarily imply local structural capability for galley weights or the passengers and seats. Structural capability for galley installations must be in accordance with Sections 1-48-00x, “Maximum Galley Weights”. Furthermore, each galley installation’s placard limit weight must not be exceeded.

Procedure for Checking Cumulative Loads

The following procedure should be used to determine allowable aft hold loading.

1. Determine the weight of the aft galley complex. This weight must include each of the following items aft of B.A. 1672: galley structure, inserts, food and beverage; floor mounted storage and closets; crew rests; the A2 and/or A3 lavatories, if installed; and attendants and attendant stations supported by the galley or lavatory structure. For the fixed A1 galley, if installed, the maximum allowable weight is 3600 LB (1632 KG). Aft of B.A. 1672, the maximum allowable weight is 7820 LB (3547 KG).
2. Determine the weight of the mid aft galley complex that is between B.A. 1086 and B.A. 1672. This weight must include: galley structure, inserts, food and beverage; floor mounted storage and closets; crew rests; attendants and attendant stations supported by the galley structure.

NOTES
- Items listed in steps 1 or 2 that do not fall within the range specified do not need to be included in the galley complex weight.
- Attendants and attendant stations not supported by galley or lavatory structure should be included in step 3.

3. Determine the weight of passengers, carry-on baggage, attendants and seats. This weight must include each of the following items aft of Balance Arm 1086: passengers and carry on baggage; seats and all items attached to the seats (e.g. seat belt, food service tray, wiring, connectors, individual video or telecommunication system, magazines, etc.); and attendants and attendant stations not already included in the galley complex weights.
4. Using the tables found under the “Allowable Loads” heading in this subject along with the weights from steps 1 through 3, calculate the allowable cumulative load for each given balance arm. Linearly interpolate between table values if the weights from steps 1 through 3 are not equal to the weights in the table. Multiple linear interpolations may be required to calculate the aft hold allowable cumulative loading.
5. Alternatively to step 4, aft hold loading may be determined directly by using the next higher table weights than those weights calculated in steps 1 through 3 to look up the corresponding cumulative loading for each balance arm. Note however, that this method may result in a more restrictive allowable loading than the method described in step 4.

APPLICABLE CONFIGURATIONS
All

-BOEING PROPRIETARY-

AFT BODY CUMULATIVE LOADS (Continued)

6. Using linear interpolation to calculate the allowable cumulative load at the fwd face of each ULD position, check to ensure cumulative loads are not exceeded at these intermediate balance arms (refer to CHP-SEC 1-64-0xx for ULD positions).

ALLOWABLE LOADS

Aft hold allowable cumulative loading as a function of main deck loading is shown below (pounds):

GALLEY COMPLEX WEIGHT - LB		B.A. (IN.)	PASSENGERS, CARRY ON BAGGAGE, ATTENDANTS, AND SEATS - LB						
AFT DOOR	MID AFT		9000	13000	17000	21000	25000	29000	33000
			ALLOWABLE CUMULATIVE LOAD AFT OF GIVEN B.A.						
4000	0	1544	6450	6450	6450	6450	6450	6450	6450
		1086	45195	45195	45195	43385	39385	35385	31385
	1000	1544	6450	6450	6450	6450	6450	6450	6450
		1086	45195	45195	45195	42385	38385	34385	30385
	2000	1544	6450	6450	6450	6450	6450	6450	6450
		1086	45195	45195	45195	41385	37385	33385	29385
	3500	1544	6450	6450	6450	6450	6450	6450	6450
		1086	45195	45195	43885	39885	35885	31885	27885
6000	0	1544	6450	6450	6450	6450	6450	6450	6450
		1086	45195	45195	45195	41385	37385	33385	29385
	1000	1544	6450	6450	6450	6450	6450	6450	6450
		1086	45195	45195	44385	40385	36385	32385	28385
	2000	1544	6450	6450	6450	6450	6450	6450	6450
		1086	45195	45195	43385	39385	35385	31385	27385
	3500	1544	6450	6365	6365	6365	6205	5445	5445
		1086	45195	45110	41885	37885	33885	29885	25885
7820	0	1544	6450	6450	6450	6450	6450	6450	6450
		1086	45195	45195	43565	39565	35565	31565	27265
	1000	1544	6450	6450	6450	6450	6450	6125	6125
		1086	45195	45195	42565	38565	34565	30565	26565
	2000	1544	6450	6045	6045	6045	5885	5125	5125
		1086	45195	44790	41565	37565	33565	29565	25565
	3500	1544	5565	4545	4545	4545	4385	3625	3625
		1086	44410	43290	40065	36065	32065	28065	24065

APPLICABLE CONFIGURATIONS
All

-BOEING PROPRIETARY-

AFT BODY CUMULATIVE LOADS (Continued)

The following table provides cumulative loads for the aft galleys in kilograms:

GALLEY COMPLEX WEIGHT - KG		B.A. (IN.)	PASSENGERS, CARRY ON BAGGAGE, ATTENDANTS, AND SEATS - KG						
AFT DOOR	MID AFT		4082	5897	7711	9525	11340	13154	14969
			ALLOWABLE CUMULATIVE LOAD AFT OF GIVEN B.A.						
1814	0	1544	2925	2925	2925	2925	2925	2925	2925
		1086	20500	20500	20500	19679	17864	16050	14235
	454	1544	2925	2925	2925	2925	2925	2925	2925
		1086	20500	20500	20500	19225	17411	15596	13782
	907	1544	2925	2925	2925	2925	2925	2925	2925
		1086	20500	20500	20500	18771	16957	15143	13328
	1588	1544	2925	2925	2925	2925	2925	2925	2925
		1086	20500	20500	19905	18091	16277	14462	12648
2722	0	1544	2925	2925	2925	2925	2925	2925	2925
		1086	20500	20500	20500	18771	16957	15143	13328
	454	1544	2925	2925	2925	2925	2925	2925	2925
		1086	20500	20500	20132	18318	16503	14689	12875
	907	1544	2925	2925	2925	2925	2925	2925	2925
		1086	20500	20500	19679	17864	16050	14235	12421
	1588	1544	2925	2887	2887	2887	2814	2469	2469
		1086	20500	20461	18998	17184	15369	13555	11741
3547	0	1544	2925	2925	2925	2925	2925	2925	2925
		1086	20500	20500	19760	17946	16132	14317	12367
	454	1544	2925	2925	2925	2925	2925	2778	2778
		1086	20500	20500	19307	17492	15678	13864	12049
	907	1544	2925	2741	2741	2741	2669	2324	2324
		1086	20500	20316	18853	17039	15224	13410	11596
	1588	1544	2524	2061	2061	2061	1989	1644	1644
		1086	20144	19636	18173	16358	14544	12730	10915

AFT BODY CUMULATIVE LOADS (Continued)

SAMPLE CUMULATIVE LOAD CHECK

A 767 is configured as shown in the illustration below. For this sample problem, economy class seats are assumed to weigh 38.5 LB (17.4 KG) per seat bottom. Passengers with carry-on baggage weigh 185 LB (83.9 KG) each. Individual galley complex component weights are tabulated at the appropriate step. Size code P containers will be carried in the forward and aft compartments. The bulk compartment is loaded with crew baggage and miscellaneous bulk cargo totalling 1600 pounds.

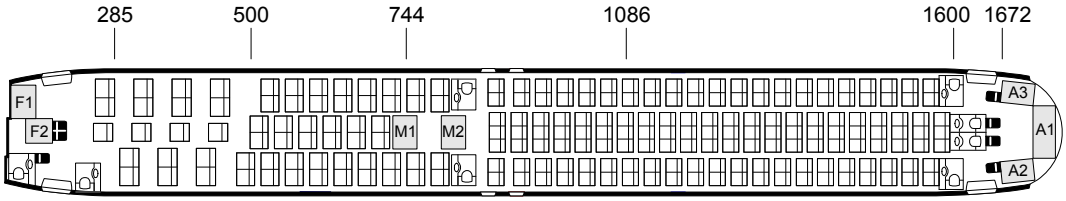

SAMPLE INTERIOR ARRANGEMENT

Step 1:

Determine the weight of the aft galley complex. For this example, the sample weights reflect typical weights for similar installations. The results are tabulated in the table below:

AFT DOOR GALLEY COMPLEX WEIGHT CALCULATION		
ITEMS AFT OF B.A. 1672[a]	**LB**	**KG**
A1 Galley Structure and Contents[b]	3400	1542
A2 Galley Structure and Contents	1600	726
A3 Galley Structure and Contents	1600	726
Attendants and Attendant Stations (2)	310	141
TOTAL AFT DOOR GALLEY COMPLEX	**6910**	**3135**

[a] The total weight of items aft of balance arm 1672 must be 7820 LB (3547 KG) or less.
[b] The total weight of the A1 Galley must be 3600 LB (1632 KG) or less.

Step 2:

Determine the weight of the mid aft galley complex. For this example, the sample weights reflect typical weights for similar installations. The results are tabulated in the table below

MID AFT GALLEY COMPLEX WEIGHT CALCULATION		
ITEMS BETWEEN B.A. 1086 AND B.A. 1672	**LB**	**KG**
Attendants and Attendant Stations (2)	310	141
TOTAL MID AFT GALLEY COMPLEX	**310**	**141**

APPLICABLE CONFIGURATIONS
All

-BOEING PROPRIETARY-

AFT BODY CUMULATIVE LOADS (Continued)

Step 3:

Determine the weight of passengers, carry on baggage and seats aft of Balance Arm 1086. The calculation results are summarized in the table below:

PASSENGERS, CARRY ON BAGGAGE, ATTENDANTS AND SEATS WEIGHT CALCULATION					
ITEMS AFT OF B.A. 1086	QUANTITY	WEIGHT EACH		TOTAL WEIGHT	
		LB	KG	LB	KG
Economy Class Seat Bottom	108	38.5	17.4	4158	1886
Passengers and Carry-On Baggage	108	185	83.9	19980	9063
TOTAL PASSENGERS, CARRY ON BAGGAGE, ATTENDANTS AND SEATS				**24138**	**10949**

Step 4:

Using the tables found under the “Allowable Loads” heading in this subject along with the weights from steps 1 through 3, calculate the allowable cumulative load for each given balance arm. From steps 1 through 3, the weights are:

- The aft door galley complex - 6910 LB (3135 KG)
- The mid aft galley complex - 310 LB (141 KG)
- The passengers, carry on baggage, attendants and seats - 24138 LB (10949 KG)

Referring to the tables in the “Allowable Loads” section of this subject (starting on page 2):

- The aft door galley complex weight of 6910 LB (3135 KG) is bracketed in the tables by values of 6000 LB (2722 KG) and 7820 LB (3547 KG).
- The mid aft galley complex weight of 310 LB (141 KG) is bracketed in the tables by values of 0 LB (0 KG) and 1000 LB (454 KG).
- The passengers, carry on baggage, attendants and seats weight of 24138 LB (10949 KG) is bracketed in the tables by values of 21000 LB (9525 KG) and 25000 LB (11340 KG).

The following table summarizes the allowable cumulative loads aft of B.A. 1544 for each of the bracketing values. Since all allowable cumulative loads are equivalent, no reduction in allowable loading is required aft of B.A. 1544.

GALLEY COMPLEX WEIGHT				PASSENGERS, CARRY ON BAGGAGE, ATTENDANTS, AND SEATS		ALLOWABLE CUMULATIVE LOAD AFT OF B.A. 1544	
AFT DOOR		MID AFT					
LB	KG	LB	KG	LB	KG	LB	KG
6000	2722	0	0	21000	9525	6450	2925
6910	*3135*	*0*	*0*	*21000*	*9525*	*6450*	*2925*
7820	3547	0	0	21000	9525	6450	2925
6000	2722	1000	454	21000	9525	6450	2925
6910	*3135*	*1000*	*454*	*21000*	*9525*	*6450*	*2925*
7820	3547	1000	454	21000	9525	6450	2925
6000	2722	0	0	25000	11340	6450	2925
6910	*3135*	*0*	*0*	*25000*	*11340*	*6450*	*2925*
7820	3547	0	0	25000	11340	6450	2925
6000	2722	1000	454	25000	11340	6450	2925
6910	*3135*	*1000*	*454*	*25000*	*11340*	*6450*	*2925*
7820	3547	1000	454	25000	11340	6450	2925

APPLICABLE CONFIGURATIONS
All

-BOEING PROPRIETARY-

AFT BODY CUMULATIVE LOADS (Continued)

The following table summarizes the allowable cumulative loads aft of B.A. 1086 for each of the bracketing values. Since the allowable cumulative loads vary for the bracketing values, the actual allowable cumulative loads must be calculated using linear interpolation. The interpolation requires three stages. The first stage involves interpolation for the aft door galley complex. The results are shown in the table below:

GALLEY COMPLEX WEIGHT				PASSENGERS, CARRY ON BAGGAGE, ATTENDANTS, AND SEATS		ALLOWABLE CUMULATIVE LOAD AFT OF B.A. 1086	
AFT DOOR		MID AFT					
LB	KG	LB	KG	LB	KG	LB	KG
6000	2722	0	0	21000	9525	41385	18771
6910	*3135*	*0*	*0*	*21000*	*9525*	*40475*	*18358*
7820	3547	0	0	21000	9525	39565	17946
6000	2722	1000	454	21000	9525	40385	18318
6910	*3135*	*1000*	*454*	*21000*	*9525*	*39475*	*17904*
7820	3547	1000	454	21000	9525	38565	17492
6000	2722	0	0	25000	11340	37385	16957
6910	*3135*	*0*	*0*	*25000*	*11340*	*36475*	*16544*
7820	3547	0	0	25000	11340	35565	16132
6000	2722	1000	454	25000	11340	36385	16503
6910	*3135*	*1000*	*454*	*25000*	*11340*	*35475*	*16090*
7820	3547	1000	454	25000	11340	34565	15678

The second stage involves using the interpolated results from the first stage, and interpolating between them for the mid aft galley complex. The results are shown in the table below:

GALLEY COMPLEX WEIGHT				PASSENGERS, CARRY ON BAGGAGE, ATTENDANTS, AND SEATS		ALLOWABLE CUMULATIVE LOAD AFT OF B.A. 1086	
AFT DOOR		MID AFT					
LB	KG	LB	KG	LB	KG	LB	KG
6910	3135	0	0	21000	9525	40475	18358
		310	*141*	*21000*	*9525*	*40165*	*18217*
		1000	454	21000	9525	39475	17904
6910	3135	0	0	25000	11340	36475	16544
		310	*141*	*25000*	*11340*	*36165*	*16403*
		1000	454	25000	11340	35475	16090

The final stage involves using the interpolated results from the second stage, and interpolating between them for the collective weight of the passengers, carry on baggage, attendants, and seats. The results are shown in the table below:

GALLEY COMPLEX WEIGHT				PASSENGERS, CARRY ON BAGGAGE, ATTENDANTS, AND SEATS		ALLOWABLE CUMULATIVE LOAD AFT OF B.A. 1544	
AFT DOOR		MID AFT					
LB	KG	LB	KG	LB	KG	LB	KG
6910	3135	310	141	21000	9525	40165	18217
				24138	*10949*	*37027*	*16793*
				25000	11340	36165	16403

APPLICABLE CONFIGURATIONS
All

-BOEING PROPRIETARY-

AFT BODY CUMULATIVE LOADS (Continued)

The resulting allowable cumulative loading calculated using the interpolation method for loads aft of Balance Arm 1086 is summarized in the following table:

GALLEY COMPLEX WEIGHT				PASSENGERS, CARRY ON BAGGAGE, ATTENDANTS, AND SEATS		B.A. IN.	ALLOWABLE CUMULATIVE LOAD AFT OF GIVEN B.A.	
AFT DOOR		MID AFT						
LB	KG	LB	KG	LB	KG		LB	KG
6910	3135	310	141	24138	10949	1086	37027	16793

The resulting allowable cumulative loading calculated using the interpolation method is summarized in the following table:

GALLEY COMPLEX WEIGHT				PASSENGERS, CARRY ON BAGGAGE, ATTENDANTS, AND SEATS		B.A. IN.	ALLOWABLE CUMULATIVE LOAD AFT OF GIVEN B.A.	
AFT DOOR		MID AFT						
LB	KG	LB	KG	LB	KG		LB	KG
6910	3135	310	141	24138	10949	1544	6450	2925
						1086	37027	16793

Step 5:

Alternatively to step 4, aft hold loading may be determined directly by using the next higher table weights than those weights calculated in steps 1 through 3 to look up the corresponding cumulative loading for each balance arm. The results for this method are shown in the following table:

GALLEY COMPLEX WEIGHT				PASSENGERS, CARRY ON BAGGAGE, ATTENDANTS, AND SEATS		B.A. IN.	ALLOWABLE CUMULATIVE LOAD AFT OF GIVEN B.A.	
AFT DOOR		MID AFT						
LB	KG	LB	KG	LB	KG		LB	KG
7820	3547	1000	454	25000	11340	1544	6450	2925
						1086	34565	15678

Note that this alternative method decreases the allowable cumulative load by 2462 LB (1115 KG) at balance arm 1086 when compared to the interpolation method described in step 4.

-BOEING PROPRIETARY-

AFT BODY CUMULATIVE LOADS (Continued)

Step 6:

The following illustration shows the ULD positions for Size Code P containers (markings shown are IATA).

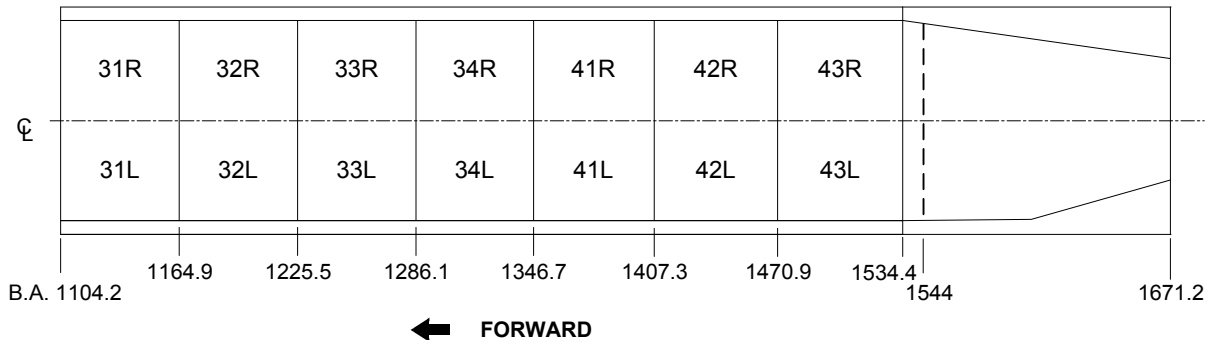

The weight for each ULD position in the aft hold must be checked to ensure cumulative loads are not exceeded at intermediate balance arms. The allowable cumulative load at the fwd face of each ULD position is calculated using the allowable loads from step 4 and linearly interpolating for the intermediate balance arms. The sample results are shown in the following table:

SAMPLE CUMULATIVE LOAD CHECK - AFT BODY							
ULD POSITION	CARGO & ULD TARE (SAMPLE SIZE CODE P)		FWD ULD FACE B.A.	ACTUAL CUMULATIVE LOAD (SAMPLE)		ALLOWABLE CUMULATIVE LOAD	
	LB	KG		LB	KG	LB	KG
Bulk Compt.	1600	726	1544.0	1600	726	6450	2925
43L & 43R	2400	1089	1470.9	4000	1814	11330	5139
42L & 42R	2600	1179	1407.3	6600	2994	15576	7065
41L & 41R	2300	1043	1346.7	8900	4037	19622	8900
34L & 34R	3300	1497	1286.1	12200	5534	23667	10735
33L & 33R	3000	1361	1225.5	15200	6895	27713	12570
32L & 32R	2800	1270	1164.9	18000	8165	31759	14405
31L & 31R	3400	1542	1104.2	21400	9707	35811	16243

Since the actual cumulative load for this sample problem is less than the allowable cumulative load at each ULD position, no reduction in cargo loading is required. However, other loading limitations may be more restrictive. Refer to the following subjects for additional information:

- CHP-SEC 1-60-20x for certified unit load device weights
- CHP-SEC 1-64-xxx for allowable unit load device locations
- CHP-SEC 1-66-xxx for missing/inoperative restraint data and other loading considerations

Generally, it is not practical to determine allowable cumulative loading for each individual loading case. Alternatively, the cumulative load check may be eliminated by determining maximum allowable ULD position weights based on the allowable cumulative loading, and then ensuring that, in practice, the ULD position weights never exceed the calculated maximum. If an occasion occurs where a ULD position does exceed the calculated maximum, then the cumulative load check procedure must be followed to ensure that allowable cumulative loading is not exceeded.

APPLICABLE CONFIGURATIONS
All

-BOEING PROPRIETARY-

AFT BODY CUMULATIVE LOADS (Continued)

Maximum allowable position weights may be derived using a number of methods. For this example, a maximum allowable ULD weight will be derived that uniformly applies to Size Code P ULDs loaded in any position in the aft hold.

Using the allowable cumulative loading values from the “Sample Cumulative Load Check - Aft Body”, the maximum ULD weight is derived by dividing the allowable cumulative load at each fwd face balance arm by the number of ULD positions aft of the balance arm. This calculation is repeated for each position’s fwd face balance arm (i.e. table row).

Using the maximum bulk compartment weight of 6450 LB. (2925 KG.) from step 4, the resulting calculated maximum position weights are summarized in the following table:

DETERMINATION OF MAXIMUM ULD WEIGHTS USING BULK COMPARTMENT ALLOWABLE LOAD OF 6450 LB (2925 KG)						
ULD POSITION	SIZE CODE P ULDS		ALLOWABLE [a] CUMULATIVE LOAD		MAXIMUM ULD WEIGHTS	
	FWD FACE B.A.	NO. AFT OF B.A.	LB	KG	LB	KG
43L & 43R	1470.9	2	4880	2213	2440	1106
42L & 42R	1407.3	4	9126	4139	2281	1034
41L & 41R	1346.7	6	13172	5974	2195	995
34L & 34R	1286.1	8	17217	7809	2152	976
33L & 33R	1225.5	10	21263	9644	2126	964
32L & 32R	1164.9	12	25309	11479	2109	956
31L & 31R	1104.2	14	29361	13317	2097	951

[a] At each listed balance arm, the allowable cumulative load available for aft compartment loading is the difference between the total allowable cumulative load and the bulk compartment load of 6450 LB (2925 KG).

The minimum result of 2097 LB (951 KG) from the above table becomes the maximum allowable ULD weight for all positions in the aft hold. In conclusion, whenever the aft hold is loaded with Size Code P ULDs, and the weight of each ULD is limited to 2097 LB (951 KG) or less, and the bulk hold is limited to 6450 LB (2925 KG), a cumulative load check is not required.

-BOEING PROPRIETARY-

CARGO COMPARTMENTS

GENERAL LOCATION AND ARRANGEMENT

The following airplane profile illustrates cargo compartment locations.

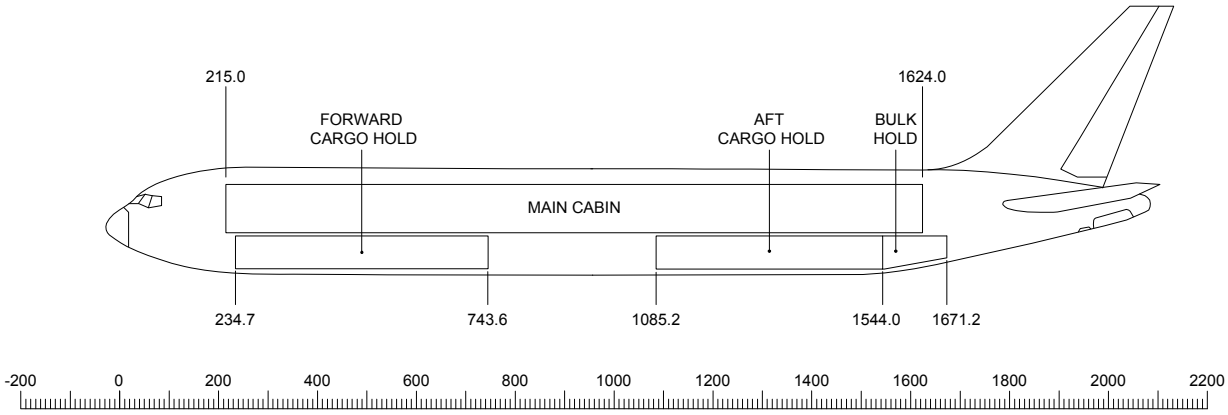

The following table provides cargo compartment locations, usable volumes and the corresponding volumetric centroid arms.

CARGO COMPARTMENT	LOCATION - B.A.		USABLE VOLUME - CU FT	B. A. IN.
	FROM	TO		
Forward	234.7	743.6	2500	489.2
Aft	1085.2	1544.0	2270	1314.6
Bulk	1544.0	1671.2	430	1611.2
Total			5200	942.3

APPLICABLE CONFIGURATIONS
All

-BOEING PROPRIETARY-

FORWARD CARGO COMPARTMENTS

FORWARD CARGO COMPARTMENT VOLUMES

The following figure shows forward cargo hold compartment boundaries.

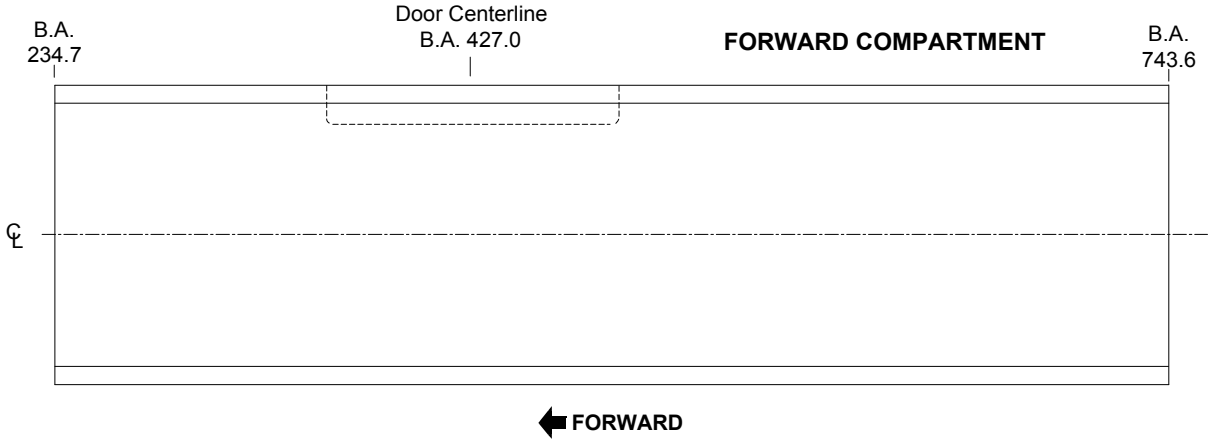

Total volume and the volumetric centroid for the above figure are provided in the following table.

COMPARTMENT	USABLE LOCATION		USABLE VOLUME CU FT	VOLUMETRIC CENTROID B.A. - IN.
	FROM	TO		
Forward Hold (Bulk)	234.7	743.6	2500	489.2

For volumes of individual unit load devices, refer to CHP-SEC 1-63-xxx; and for the allowable positions of unit load devices, refer to CHP-SEC 1-64-xxx.

FORWARD CARGO COMPARTMENT CROSS SECTIONS

The figure below illustrates the cross-section of the forward cargo compartment. This cross-section is constant throughout the length of the forward cargo compartment.

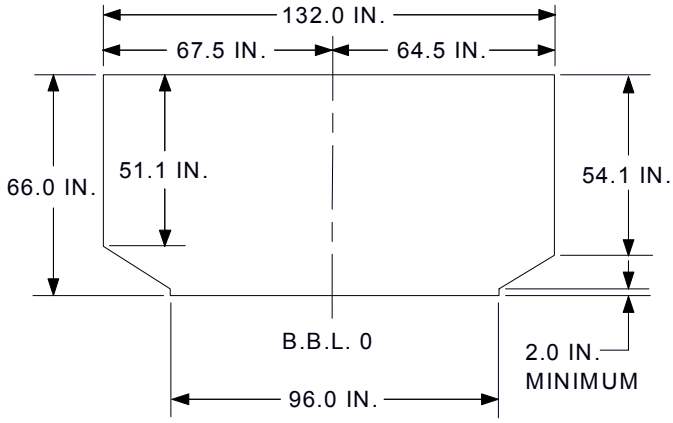

APPLICABLE CONFIGURATIONS
All

-BOEING PROPRIETARY-

FORWARD CARGO COMPARTMENTS (Continued)

CARGO DOOR DIMENSIONS AND ALLOWABLE PACKAGE SIZES

This section provides dimensions of the maximum package sizes which will pass through the forward cargo door opening. The maximum length is restricted by the geometry of the sidewall liner opposite the door.

Package sizes are approximate. Tilting, twisting, bending and/or rotating packages through door openings will allow additional lengths in many cases, but should be determined for each situation. A trial loading is recommended for packages with dimensions close to maximum dimensions indicated in the tables.

The height dimensions do not include allowances for items increasing package height such as fork lift tyne thicknesses, pallet depths, skid tub heights, etc. Any such devices must be accounted for in the total height.

Bulk cargo is usually carried in the bulk hold. Bulk cargo can also be carried in the Fwd Containerized Hold or as a mix with containerized loads provided:

1. The bulk cargo is not of shape or density that could become a hazard to the airplane structure or systems (e.g. dense or piercing items that could become projectiles) otherwise tie-down is required.
2. It is restrained to prevent causing a large change in the airplane C.G.
3. It has a 2 inch minimum clearance from the ceiling lights, smoke detectors and hold liners.
4. It does not exceed the holds area and longitudinal loading limits of CHP-SEC 1-60-00x.

Refer to CHP-SEC 1-68-00x for tiedown information.

Package Size Illustration

The following illustration shows package dimensioning used in the allowable package size tables.

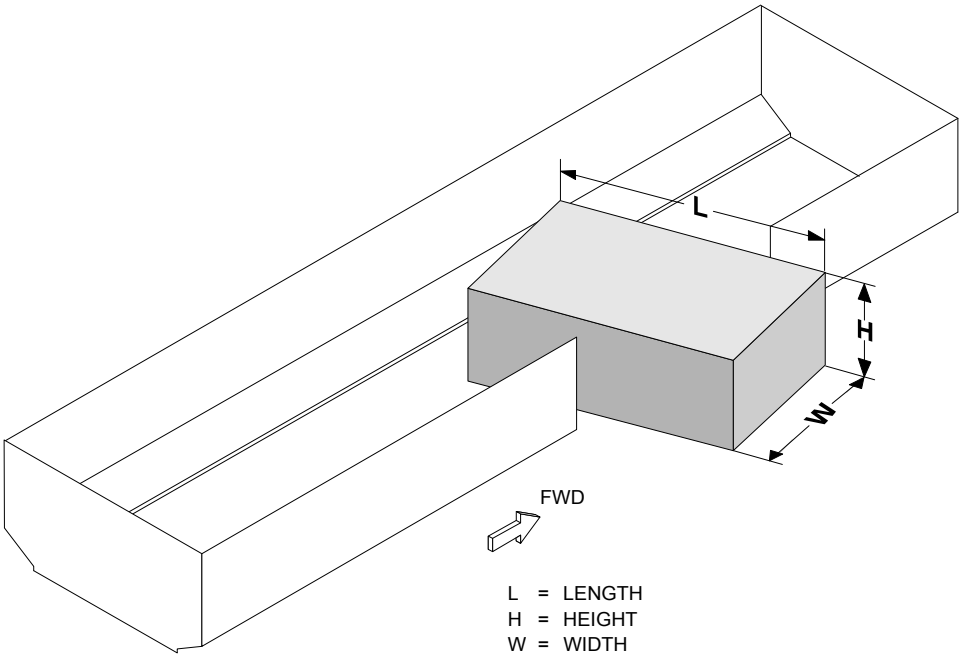

APPLICABLE CONFIGURATIONS
All

-BOEING PROPRIETARY-

FORWARD CARGO COMPARTMENTS (Continued)

Door Dimensions

The following figure provides the forward cargo door dimensions.

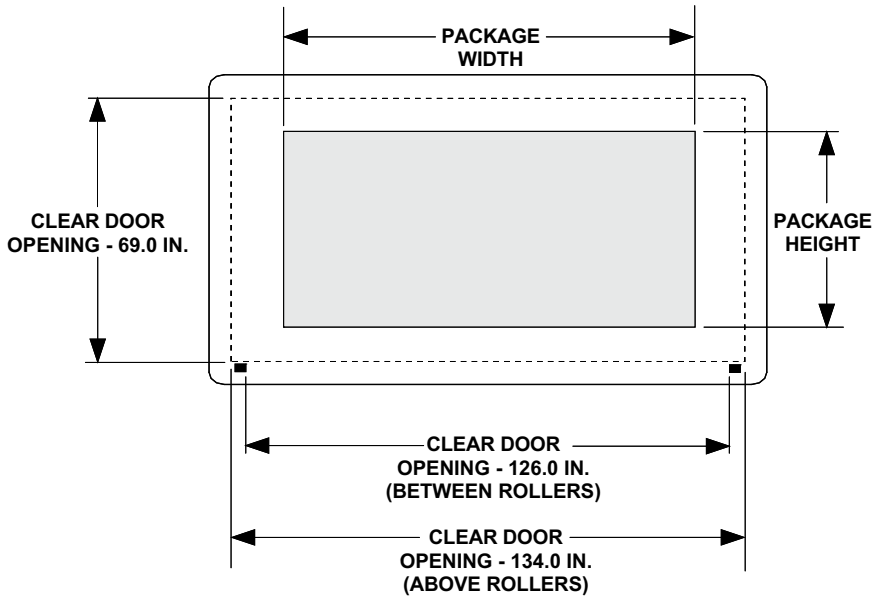

Allowable Package Sizes

The following tables are applicable for packages loaded aft of the forward cargo door (B.A. 427.0 IN.).

FORWARD COMPARTMENT ALLOWABLE PACKAGE SIZES							
HEIGHT IN.	WIDTH IN.						
	20	40	60	80	100	120	134
	LENGTH IN.						
63.5 - 66.0	294	245	196	152			
63.4	330	257	223	180	145		
60.0	366	278	239	193	156		
55.0	366	308	257	209	170	141	
50.0	366	322	257	220	180	150	
40.0	366	327	257	220	183	154	

APPLICABLE CONFIGURATIONS
All

-BOEING PROPRIETARY-

AFT CARGO COMPARTMENTS

AFT CARGO COMPARTMENT VOLUMES

The following figure shows aft cargo hold compartment boundaries.

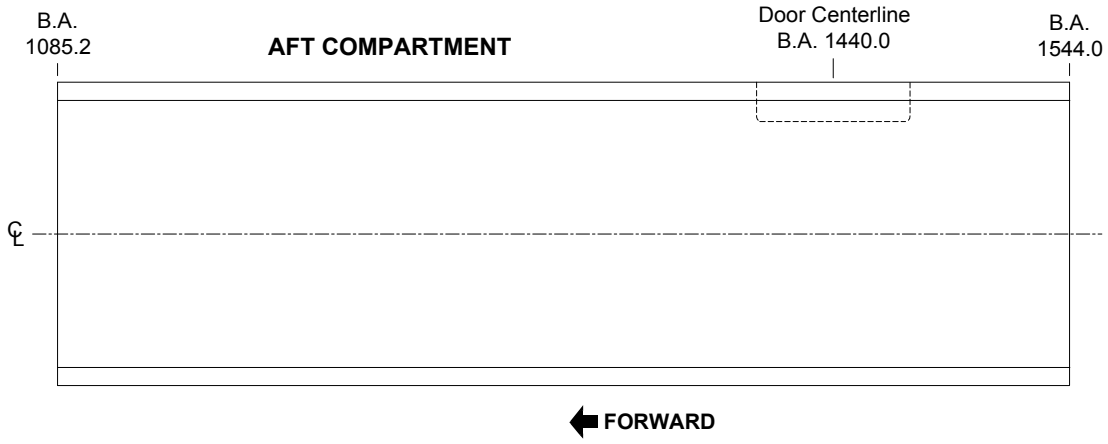

Total volume and the volumetric centroid for the above figure are provided in the following table.

COMPARTMENT	USABLE LOCATION		USABLE VOLUME CU FT	VOLUMETRIC CENTROID B.A. - IN.
	FROM	TO		
Aft Hold (Bulk)	1085.2	1544.0	2270	1314.6

For volumes of individual unit load devices, refer to CHP-SEC 1-63-0xx; and for the allowable positions of unit load devices, refer to CHP-SEC 1-64-0xx.

AFT CARGO COMPARTMENT CROSS SECTIONS

The figure below illustrates the cross-section of the aft cargo compartment. This cross-section is constant throughout the length of the aft cargo compartment.

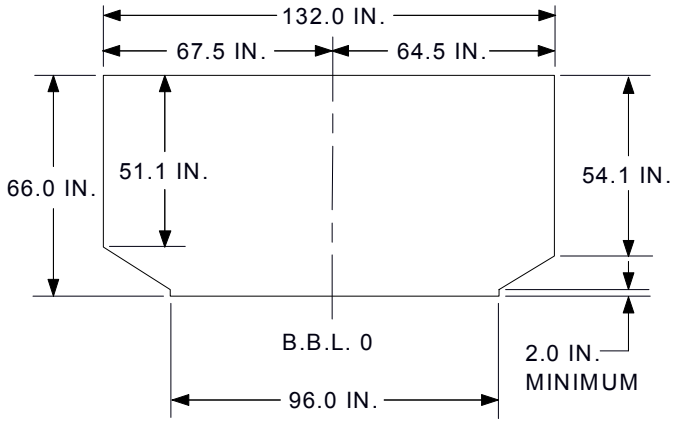

APPLICABLE CONFIGURATIONS
All

-BOEING PROPRIETARY-

AFT CARGO COMPARTMENTS (Continued)

CARGO DOOR DIMENSIONS AND ALLOWABLE PACKAGE SIZES

This section provides dimensions of the maximum package sizes which will pass through the aft cargo door opening. The maximum length is restricted by the geometry of the sidewall liner opposite the door.

Package sizes are approximate. Tilting, twisting, bending and/or rotating packages through door openings will allow additional lengths in many cases, but should be determined for each situation. A trial loading is recommended for packages with dimensions close to maximum dimensions indicated in the tables.

The height dimensions do not include allowances for items increasing package height such as fork lift tyne thicknesses, pallet depths, skid tub heights, etc. Any such devices must be accounted for in the total height.

Bulk cargo is usually carried in the bulk hold. Bulk cargo can also be carried in the Aft Containerized Hold or as a mix with containerized loads provided:

1. The bulk cargo is not of shape or density that could become a hazard to the airplane structure or systems (e.g. dense or piercing items that could become projectiles) otherwise tie down is required.
2. It is restrained to prevent causing a large change in the airplane C.G.
3. It has as a 2 inch minimum clearance from the ceiling lights, smoke detectors and hold liners.
4. It does not exceed the holds area and longitudinal loading limits of CHP-SEC 1-60-00x.
5. The barrier net at the end of the cargo hold must be installed when carrying non-certified ULDs or bulk cargo. Otherwise the maximum allowable weight limit is 0 LB (KG) or tie down is required for all non-certified ULDs and bulk cargo.

Refer to CHP-SEC 1-68-00x for tiedown information.

Package Size Illustration

The following illustration shows package dimensioning used in the allowable package size tables.

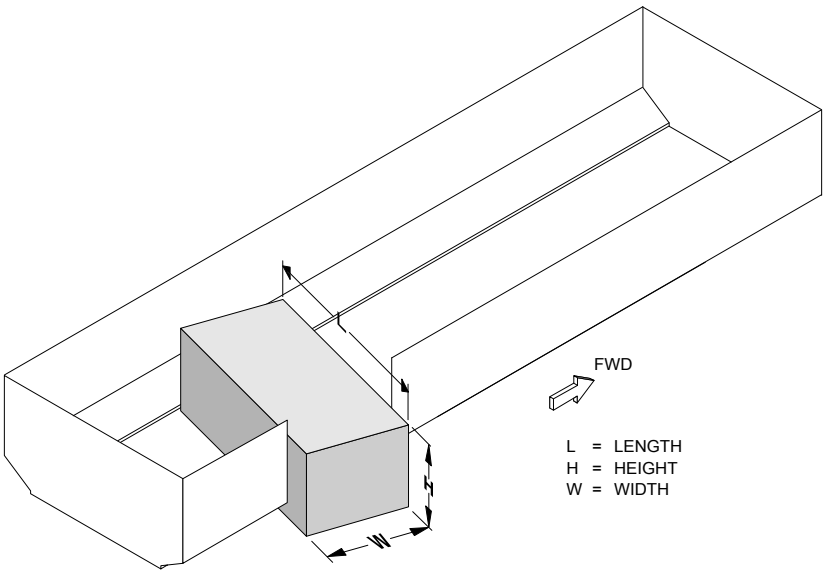

APPLICABLE CONFIGURATIONS
All

-BOEING PROPRIETARY-

AFT CARGO COMPARTMENTS (Continued)

Door Dimensions

The following figure provides the aft cargo door dimensions.

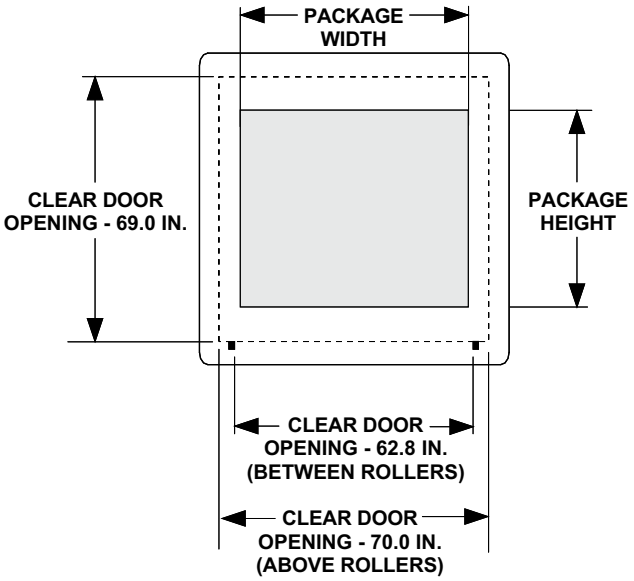

Allowable Package Sizes

The following table is applicable for packages loaded forward of the aft cargo door (B.A. 1440.0 IN.).

AFT COMPARTMENT ALLOWABLE PACKAGE SIZES							
HEIGHT IN.	WIDTH IN.						
	10	20	30	40	50	60	70
	LENGTH IN.						
63.5 - 66.0	215	190	168	146	120	100	
63.4	241	211	188	167	148	130	110
60.0	257	227	200	178	159	140	120
51.1	327	273	228	201	179	157	137
40.0	339	277	239	210	185	162	138
30.0	357	287	239	210	187	167	145
20.0	385	302	239	210	187	168	152
10.0	410	328	239	210	187	171	156

APPLICABLE CONFIGURATIONS
All

-BOEING PROPRIETARY-

BULK CARGO COMPARTMENT

BULK CARGO COMPARTMENT VOLUME

The following figure shows the bulk cargo hold compartment boundaries.

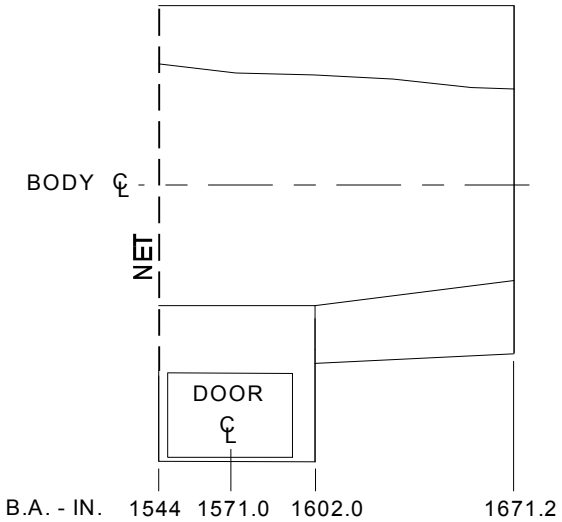

Total volume and the volumetric centroid for the above figure are provided in the following table.

COMPARTMENT	USABLE LOCATION		USABLE VOLUME CU FT	VOLUMETRIC CENTROID B.A. - IN.
	FROM	TO		
Bulk Compartment	1544[a]	1671.2	430	1611.2

[a] The Balance Arm varies from left to right. 1544 is the average Balance Arm.

BULK CARGO COMPARTMENT CROSS SECTIONS

The figure below illustrates the general layout of the bulk cargo compartment. The numbered labels and shaded panels correspond to the cross-sections provided following the illustration.

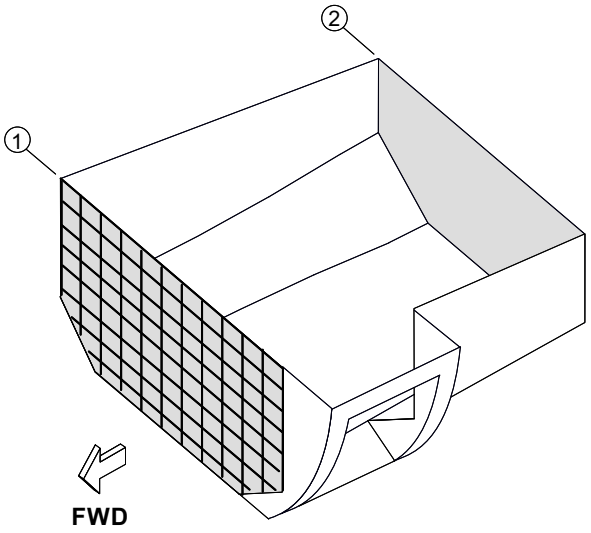

APPLICABLE CONFIGURATIONS
All

-BOEING PROPRIETARY-

BULK CARGO COMPARTMENT (Continued)

The following cross-sections for the bulk compartment can be used to determine ceiling clearances at various bulk cargo compartment balance arms. The relative location of the cross-sectional cut can be determined by correlating the cross-section number to the general layout shown above.

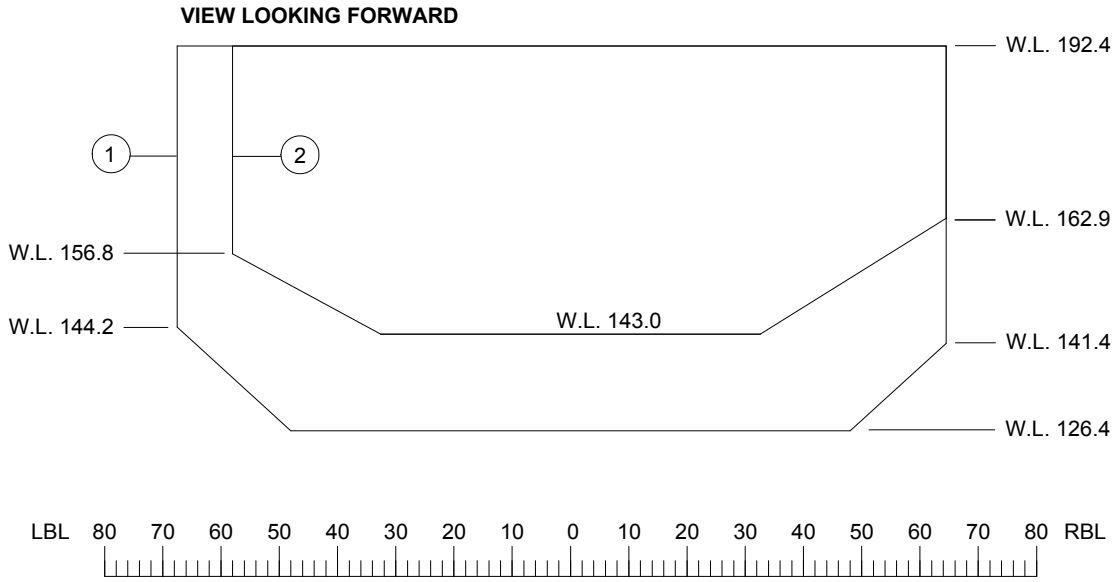

CROSS SECTION NO.	B.A. IN.
1	1544.0
2	1671.2

APPLICABLE CONFIGURATIONS
All

-BOEING PROPRIETARY-

BULK CARGO COMPARTMENT (Continued)

CARGO DOOR DIMENSIONS AND ALLOWABLE PACKAGE SIZES

This section provides dimensions of the maximum package sizes which will pass through the bulk cargo door opening. The maximum length is restricted by the geometry of the compartment.

Package sizes are approximate. Tilting, twisting, bending and/or rotating packages through door openings will allow additional lengths in many cases, but should be determined for each situation. A trial loading is recommended for packages with dimensions close to maximum dimensions indicated in the tables.

Bulk cargo is usually carried in the bulk compartment. Bulk cargo can also be carried in the Forward or Aft Containerized Cargo Compartment or as a mix with containerized loads. Tiedowns may be required. Refer to CHP-SEC 1-68-00x for tiedown information.

Package Size Illustration

The following illustration shows package dimensioning used in the allowable package size tables.

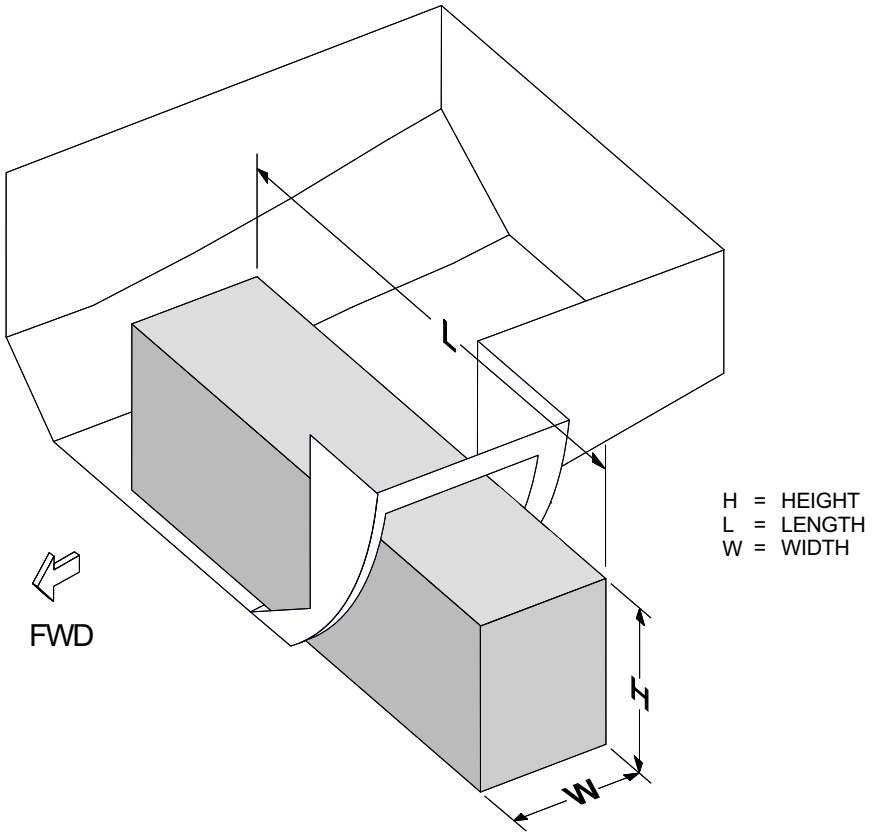

APPLICABLE CONFIGURATIONS
All

-BOEING PROPRIETARY-

BULK CARGO COMPARTMENT (Continued)

Door Dimensions

The following figure provides the bulk cargo door dimensions.

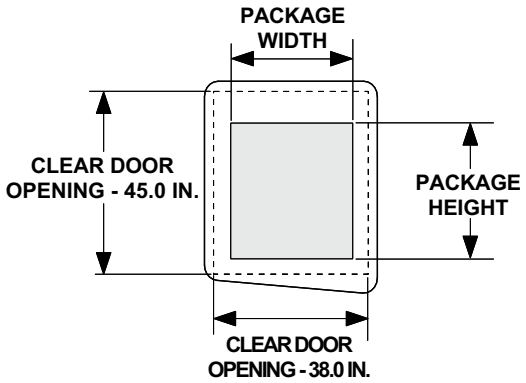

Allowable Package Sizes

The following tables are applicable for packages loaded forward of the bulk cargo door (B.A. 1571.0 IN.).

BULK COMPARTMENT ALLOWABLE PACKAGE SIZES							
HEIGHT IN.	WIDTH IN.						
	5	10	20	30	35	36	36.6
	LENGTH IN.						
47.2	119						
46.6	119	119					
45.5	119	119	119				
42.0	119	119	119	119	119		
35.7	119	119	119	119	119		
20.0	119	119	119	119	119	119	
10.0	119	119	119	119	119	119	
5.0	119	119	119	119	119	119	119

APPLICABLE CONFIGURATIONS
All

-BOEING PROPRIETARY-

UNIT LOAD DEVICES - LOWER DECK

SIZE CODES K, P AND Q

A Unit Load Device (ULD) is a device for grouping and retaining cargo for transit. The ULD can refer to a pallet and net, a pallet and net over an igloo, or a container. This Chapter-Section-Subject provides volume, center of gravity limits, dimensions, and lateral positions for size code K, P and Q unit load devices.

Size code K, P and Q certified ULDs conform to TSO-C90 which is a Technical Standard Order (TSO) from the FAA.

Non-certified Size Code K, P and Q ULDs can be carried provided all of the following considerations are observed. Otherwise, they must be tied down per CHP-SEC 1-68-00x:

1. The non-certified ULD must be serviceable, well constructed, and loaded in a manner that will prevent it or its cargo from becoming a hazard to the airplane structure or systems under operational loads.
2. The non-certified ULD must match the external profiles of the allowable certified ULDs shown in this section. Non-certified ULDs that are less than 63 inches high require tie-downs for the ULD's gross weight.
3. The non-certified ULD must engage the restraint hardware similar to an certified ULD. Load limitations associated with missing/inoperative restraints must be observed in the same manner as for approved ULDs to prevent damage to the restraint equipment or its local support structure.

Use of ULDs that are not specified in this manual requires tiedowns for the ULD's gross weight. See CHP-SEC 1-68-00x.

APPLICABLE CONFIGURATIONS
All

-BOEING PROPRIETARY-

UNIT LOAD DEVICES - LOWER DECK (Continued)

VOLUMES AND CENTER OF GRAVITY LIMITS

The design capacities of the support fittings and structure have been established within an allowable center of gravity range as shown in the table below.

DESIGNATION		BASE DIMENSION IN.	VOLUME CU FT	ALLOWABLE CENTER OF GRAVITY RANGE IN.		
SIZE CODE	COMMON			VERTICAL	LATERAL	LONGITUDINAL
K	LD-1	60.4 x 61.5	175	34.0	± 6.2	± 6.0
	LD-3		159	34.0	± 6.2	± 6.0
P	LD-2	60.4 x 47.0	124	34.0	± 4.7	± 6.0
Q	LD-4	60.4 x 96.0	200	34.0	± 9.6	± 6.0
	LD-8		252	34.0	± 9.6	± 6.0

The allowable center of gravity range is based on the geometric center of the unit load device base dimension. The vertical center of gravity is measured from the base of the container. Good judgement must be used in distributing the load within the unit load device.

CAUTIONS

- UNIT LOAD DEVICES WHICH DO NOT SATISFY THE PRECEDING REQUIREMENTS MUST BE RESTRAINED BY TIEDOWNS AS SPECIFIED IN CHP-SEC 1-68-0xx, CARGO TIEDOWNS.
- CARGO CARRIED IN A ULD THAT IS OF SHAPE AND/OR DENSITY THAT COULD BECOME A HAZARD TO THE AIRPLANE STRUCTURE OR SYSTEMS UNDER OPERATIONAL LOADS (E.G. DENSE OR PIERCING ITEMS THAT COULD BECOME PROJECTILES) MUST BE TIED DOWN TO THE ULD.
- UNIT LOAD DEVICES LESS THAN 63 INCHES IN HEIGHT THAT ARE NOT VERTICALLY RESTRAINED MUST BE RESTRAINED BY TIEDOWNS AS SPECIFIED IN CHP-SEC 1-68-0xx.
- TO REDUCE INADVERTENT CARGO MOVEMENT, IT IS RECOMMENDED THAT ALL AVAILABLE RESTRAINTS, INCLUDING LATERAL GUIDES, IN UNOCCUPIED POSITIONS BE RAISED.

APPLICABLE CONFIGURATIONS
All

-BOEING PROPRIETARY-

UNIT LOAD DEVICES - LOWER DECK (Continued)

DIMENSIONS AND LATERAL POSITIONS

The external dimensions and lateral positions of size code K, P & Q unit load devices in the lower hold are provided in the following illustrations (refer to CHP-SEC 1-69-xxx for actual lateral locations).

Size Code K

ULD DIMENSIONS	LATERAL POSITION
LD-1 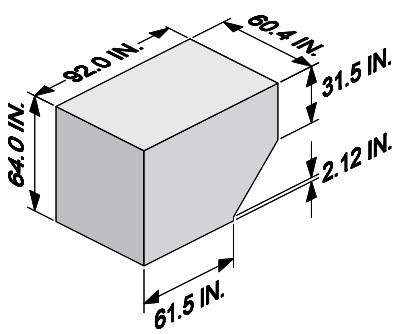	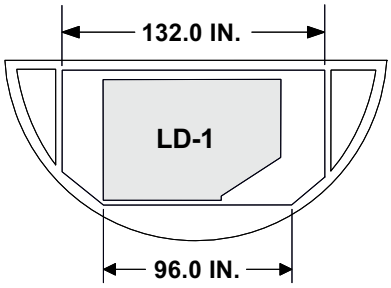 REAR VIEW
LD-3 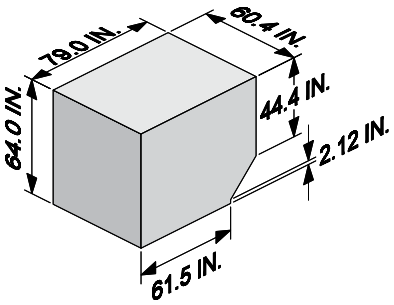	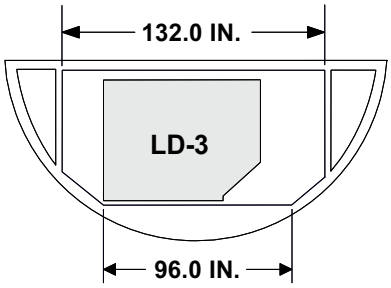 REAR VIEW 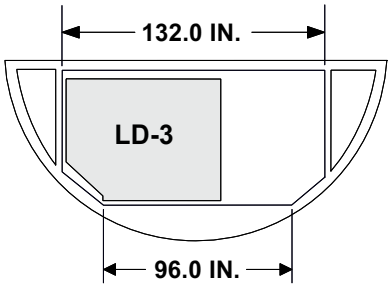 REAR VIEW

APPLICABLE CONFIGURATIONS
All

-BOEING PROPRIETARY-

UNIT LOAD DEVICES - LOWER DECK (Continued)

Size Code P

ULD DIMENSIONS	LATERAL POSITION
LD-2 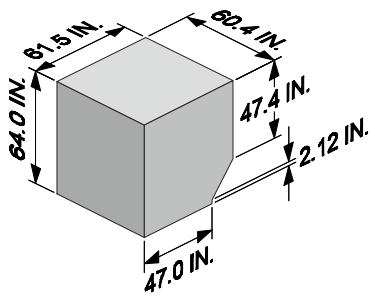	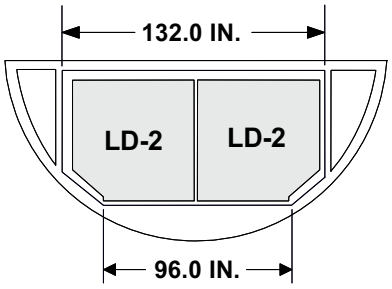

Size Code Q

ULD DIMENSIONS	LATERAL POSITION
LD-4 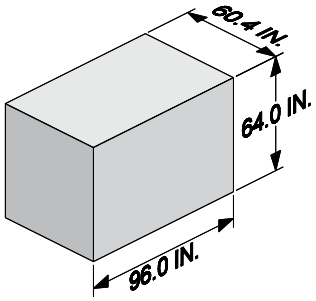	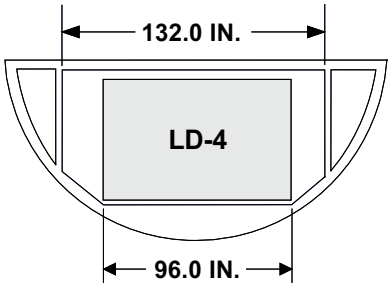
LD-8 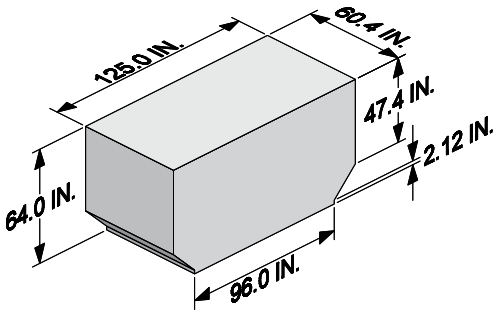	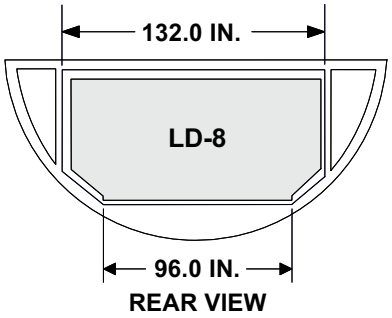

APPLICABLE CONFIGURATIONS
All

-BOEING PROPRIETARY-

UNIT LOAD DEVICES - LOWER DECK

SIZE CODES A, L AND M

A Unit Load Device (ULD) is a device for grouping and retaining cargo for transit. The ULD can refer to a pallet and net, a pallet and net over an igloo, or a container. This Chapter-Section-Subject provides volume, center of gravity limits, dimensions, and lateral positions for size code A, L and M unit load devices.

Size code A, L and M certified ULDs conform to TSO-C90 which is a Technical Standard Order (TSO) from the FAA.

Non-certified Size Code A, L and M ULDs can be carried provided all of the following considerations are observed. Otherwise, they must be tied down per CHP-SEC 1-68-00x:

1. The non-certified ULD must be serviceable, well constructed, and loaded in a manner that will prevent it or its cargo from becoming a hazard to the airplane structure or systems under operational loads.
2. The non-certified ULD must match the external profiles of the allowable certified ULDs shown in this section. Non-certified ULDs that are less than 63 inches high require tie-downs for the ULD's gross weight.
3. The non-certified ULD must engage the restraint hardware similar to an certified ULD. Load limitations associated with missing/inoperative restraints must be observed in the same manner as for approved ULDs to prevent damage to the restraint equipment or its local support structure.

Use of ULDs that are not specified in this manual requires tiedowns for the ULD's gross weight. See CHP-SEC 1-68-00x.

APPLICABLE CONFIGURATIONS
All

-BOEING PROPRIETARY-

UNIT LOAD DEVICES - LOWER DECK (Continued)

VOLUMES AND CENTER OF GRAVITY LIMITS

The design capacities of the support fittings and structure have been established within an allowable center of gravity range as shown in the table below.

DESIGNATION		BASE DIMENSION IN.	VOLUME CU FT	ALLOWABLE CENTER OF GRAVITY RANGE IN.		
SIZE CODE	COMMON			VERTICAL	LATERAL	LONGITUDINAL
A	P1	88 x 125	381	36.0	± 8.8	± 12.5
	LD-7		381	36.0	± 8.8	± 12.5
	LD-9		381	36.0	± 8.8	± 12.5
L	LD-5	60.4 x 125	261	34.0	± 6.0	± 12.5
	LD-10		246	34.0	± 6.0	± 12.5
	LD-11		262	34.0	± 6.0	± 12.5
	Half Pallet		256	34.0	± 6.0	± 12.5
M	P6	96 x 125	407	36.0	± 9.6	± 12.5

The allowable center of gravity range is based on the geometric center of the unit load device base dimension. The vertical center of gravity is measured from the base of the container. Good judgement must be used in distributing the load within the unit load device.

Use of ULDs that are not specified in this manual requires tiedowns for the ULD's gross weight and the specified load factors.

CAUTIONS

- UNIT LOAD DEVICES WHICH DO NOT SATISFY THE PRECEDING REQUIREMENTS MUST BE RESTRAINED BY TIEDOWNS AS SPECIFIED IN CHP-SEC 1-68-0xx, CARGO TIEDOWNS.
- CARGO CARRIED IN A ULD THAT IS OF SHAPE AND/OR DENSITY THAT COULD BECOME A HAZARD TO THE AIRPLANE STRUCTURE OR SYSTEMS UNDER OPERATIONAL LOADS (E.G. DENSE OR PIERCING ITEMS THAT COULD BECOME PROJECTILES) MUST BE TIED DOWN TO THE ULD.
- UNIT LOAD DEVICES LESS THAN 63 INCHES IN HEIGHT THAT ARE NOT VERTICALLY RESTRAINED MUST BE RESTRAINED BY TIEDOWNS AS SPECIFIED IN CHP-SEC 1-68-0xx.
- TO REDUCE INADVERTENT CARGO MOVEMENT, IT IS RECOMMENDED THAT ALL AVAILABLE RESTRAINTS, INCLUDING LATERAL GUIDES, IN UNOCCUPIED POSITIONS BE RAISED.

APPLICABLE CONFIGURATIONS
All

-BOEING PROPRIETARY-

UNIT LOAD DEVICES - LOWER DECK (Continued)

DIMENSIONS AND LATERAL POSITIONS

The external dimensions and lateral positions of size code A, L & M unit load devices in the lower hold are provided in the following illustrations (refer to CHP-SEC 1-69-00x for actual lateral locations).

Size Code A

ULD DIMENSIONS	LATERAL POSITION
P1 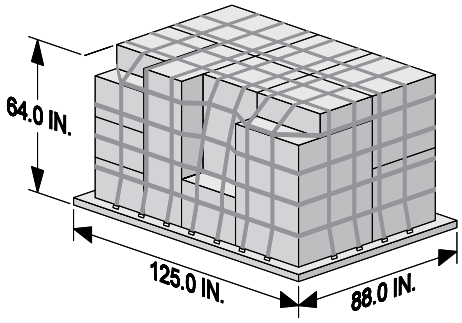	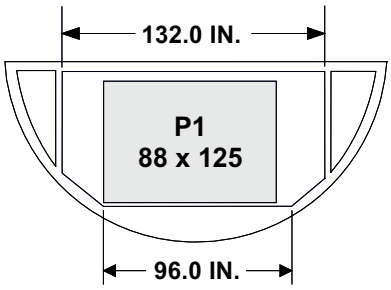 REAR VIEW
LD-7 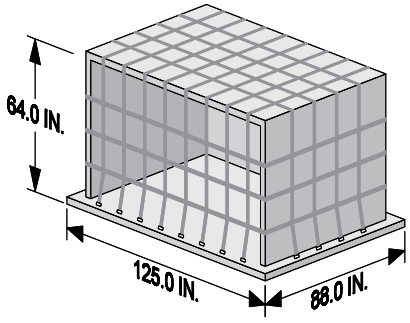 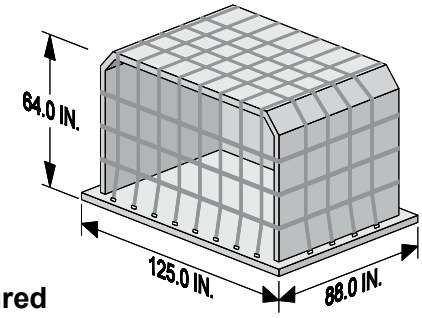 Contoured	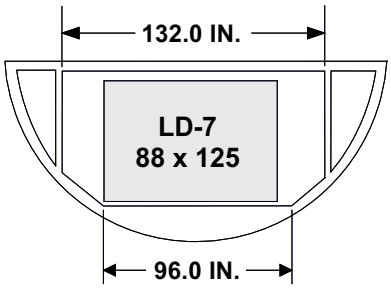 REAR VIEW

APPLICABLE CONFIGURATIONS
All

-BOEING PROPRIETARY-

UNIT LOAD DEVICES - LOWER DECK (Continued)

ULD DIMENSIONS	LATERAL POSITION
LD-9 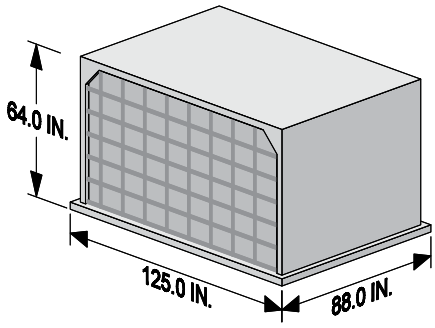 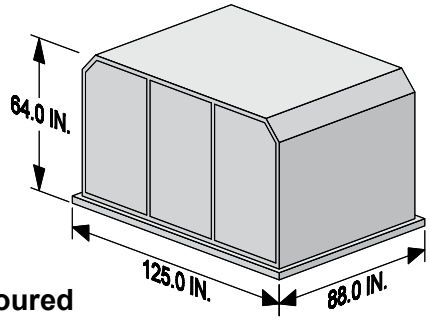 Contoured	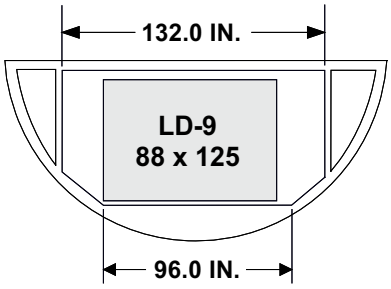 REAR VIEW

Size Code M

ULD DIMENSIONS	LATERAL POSITION
P6 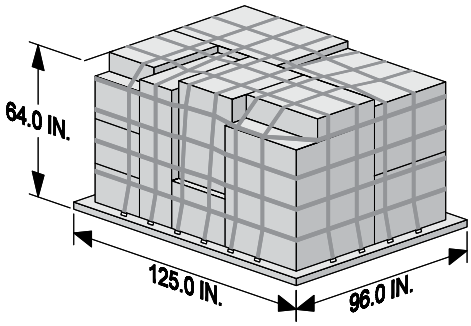	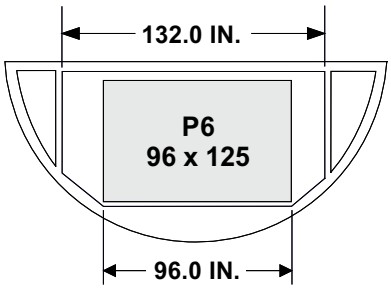 REAR VIEW

APPLICABLE CONFIGURATIONS
All

-BOEING PROPRIETARY-

UNIT LOAD DEVICES - LOWER DECK (Continued)

Size Code L

ULD DIMENSIONS	LATERAL POSITION
LD-5 LD-11 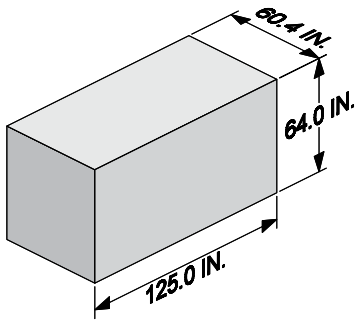	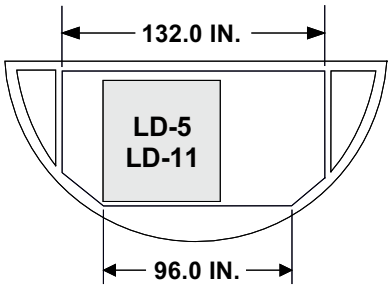 REAR VIEW
LD-10 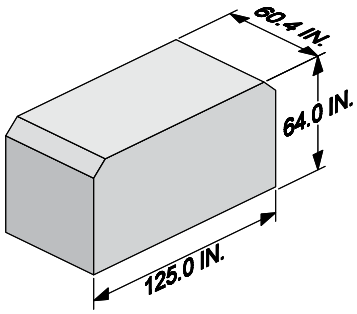	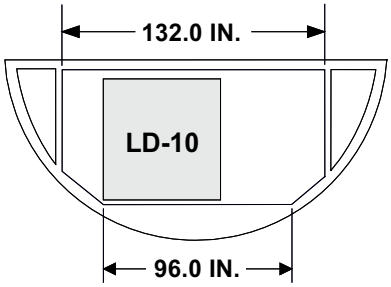 REAR VIEW
Half Pallet 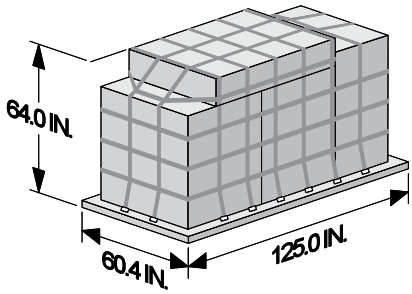	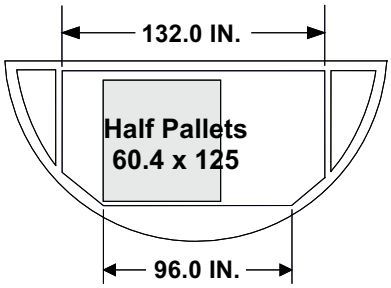 REAR VIEW

APPLICABLE CONFIGURATIONS
All

-BOEING PROPRIETARY-

FORWARD COMPARTMENT UNIT LOAD DEVICE LOCATIONS

SIZE CODES K, P & Q

The illustration below shows the allowable positions in the forward compartment for size code K, P & Q unit load devices.

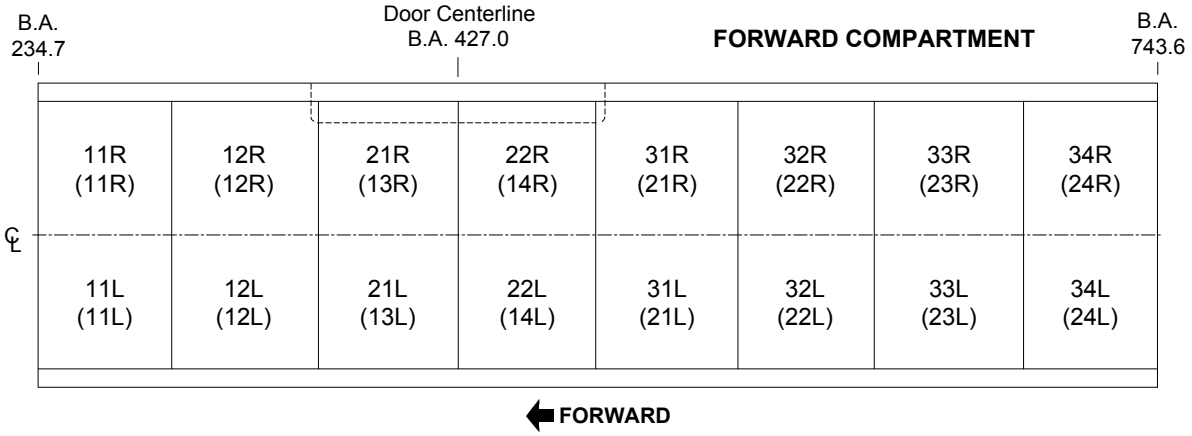

NOTE Position markings contained within parenthesis ( ) are equivalent IATA markings.

Assuming a uniformly distributed load for the positions shown in the above illustration, the following table tabulates the center of gravity for each individual position, and provides the resultant center of gravity for the total of all positions shown.

FORWARD COMPARTMENT UNIT LOAD DEVICE LOCATION CENTERS OF GRAVITY - SIZE CODES K, P & Q				
ULD POSITION MARKINGS		BALANCE ARM - IN.		
BOEING STANDARD	IATA	POSITION	COMPARTMENT	TOTAL
11L & 11R	11L & 11R	267.5	364.7	491.8
12L & 12R	12L & 12R	330.9		
21L & 21R	13L & 13R	395.3		
22L & 22R	14L & 14R	465.0		
31L & 31R	21L & 21R	526.5	618.8	
32L & 32R	22L & 22R	588.0		
33L & 33R	23L & 23R	649.5		
34L & 34R	24L & 24R	711.0		

APPLICABLE CONFIGURATIONS
All

-BOEING PROPRIETARY-

FORWARD COMPARTMENT UNIT LOAD DEVICE LOCATIONS

SIZE CODES A, L & M

The illustration below shows the allowable positions in the forward compartment for size code A, L & M unit load devices.

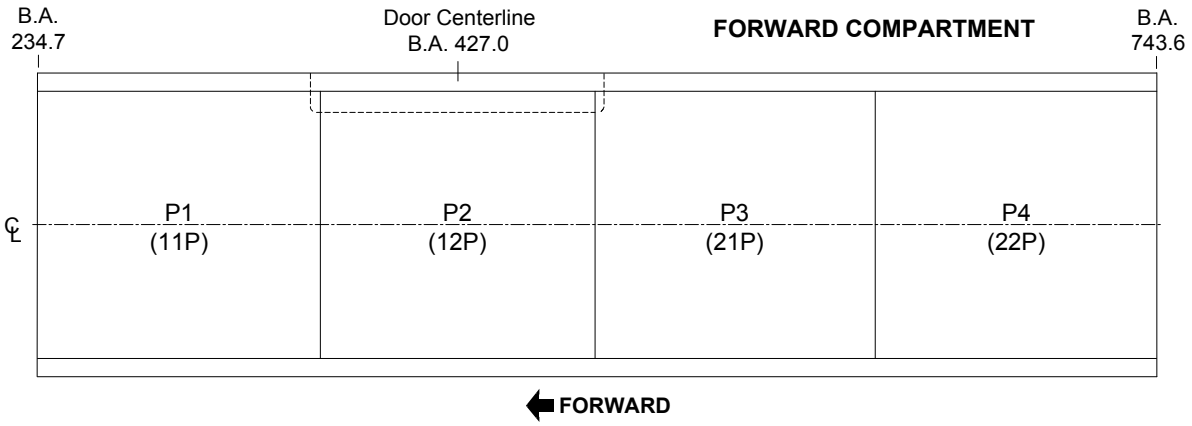

NOTE Position markings contained within parenthesis ( ) are equivalent IATA markings.

Assuming a uniformly distributed load for the positions shown in the above illustration, the following table tabulates the center of gravity for each individual position, and provides the resultant center of gravity for the total of all positions shown.

FORWARD COMPARTMENT UNIT LOAD DEVICE LOCATION CENTERS OF GRAVITY - SIZE CODES A, L & M				
ULD POSITION MARKINGS		BALANCE ARM - IN.		
BOEING STANDARD	IATA	POSITION	COMPARTMENT	TOTAL
P1	11P	298.5	362.8	489.5
P2	12P	427.0		
P3	21P	553.2	616.2	
P4	22P	679.2		

APPLICABLE CONFIGURATIONS
All

-BOEING PROPRIETARY-

AFT COMPARTMENT UNIT LOAD DEVICE LOCATIONS

SIZE CODES K, P & Q

The illustration below shows the allowable positions in the aft compartment for size code K, P & Q unit load devices.

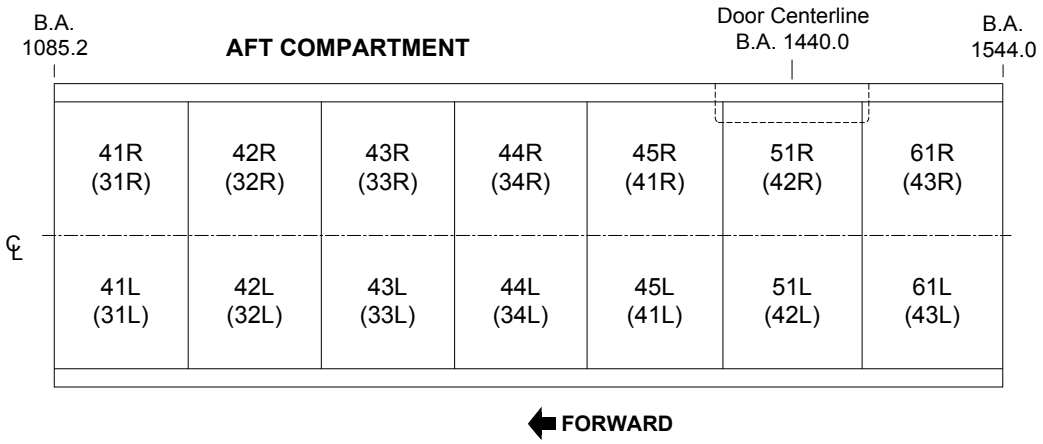

NOTE Position markings contained within parenthesis ( ) are equivalent IATA markings.

Assuming a uniformly distributed load for the positions shown in the above illustration, the following table tabulates the center of gravity for each individual position, and provides the resultant center of gravity for the total of all positions shown.

AFT COMPARTMENT UNIT LOAD DEVICE LOCATION CENTERS OF GRAVITY - SIZE CODES K, P & Q				
ULD POSITION MARKINGS		BALANCE ARM - IN.		
BOEING STANDARD	IATA	POSITION	COMPARTMENT	TOTAL
41L & 41R	31L & 31R	1134.6	1225.5	1317.5
42L & 42R	32L & 32R	1195.2		
43L & 43R	33L & 33R	1255.8		
44L & 44R	34L & 34R	1316.4		
45L & 45R	41L & 41R	1377.0	1440.2	
51L & 51R	42L & 42R	1440.0		
61L & 61R	43L & 43R	1503.6		

APPLICABLE CONFIGURATIONS
All

-BOEING PROPRIETARY-

FORWARD COMPARTMENT UNIT LOAD DEVICE LOAD LIMITS

CARGO RESTRAINT SYSTEM - SIZE CODES K, P & Q

The longitudinal area between each combination of fwd / aft restraints is referred to as a zone. All zones in a cargo compartment are unique, and all restraints within the boundaries of a zone are either down or inoperable. The illustration below identifies the locations of the stops / locks / guides and the associated zones for size codes K, P & Q.

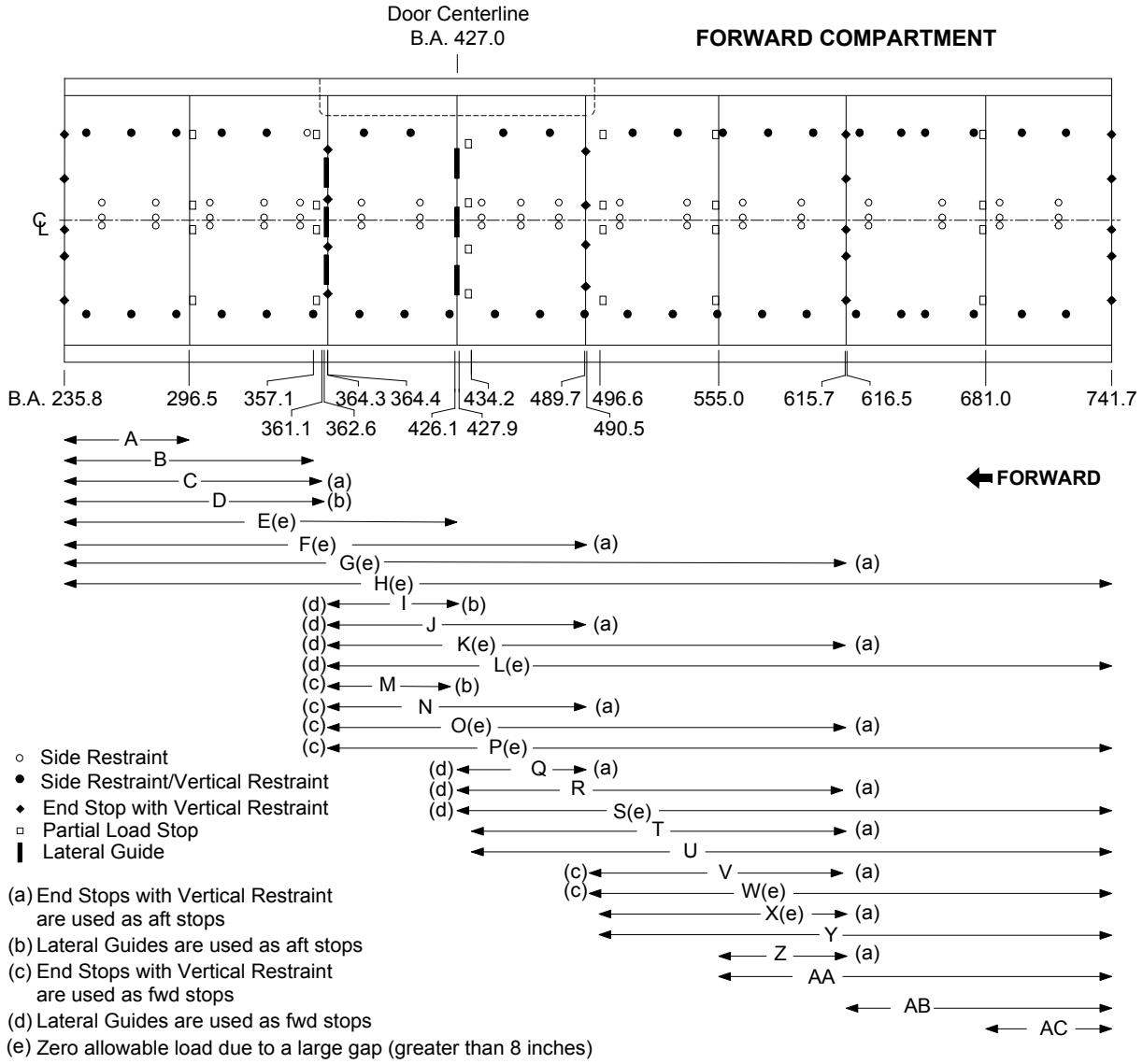

APPLICABLE CONFIGURATIONS
All

-BOEING PROPRIETARY-

FORWARD COMPARTMENT UNIT LOAD DEVICE LOAD LIMITS (Continued)

Unit Load Device Intermixing

Size codes K, P & Q containers can be intermixed within a zone, provided that:

- All restraints are operable.
- An LD-2 container cannot be located on the right side of the compartment with an LD-1 or LD-3 container located forward or aft of it.
- LD-2 containers must be loaded in pairs when placed forward or aft of an LD-4 or LD-8 container.

If a fwd / aft restraint is broken or inoperative, containers can still be intermixed provided:

- The allowable zonal load per the missing restraint section is not exceeded.
- Only LD-1, LD-3, LD-4 or LD-8 containers are at the end of a string of containers at which a restraint is missing or inoperative. Do not place a pair of LD-2 containers (side by side) against inoperative restraints when intermixing containers.

LOAD LIMITS - SIZE CODES K, P & Q

The remaining sections of this subject describe loading considerations, restraint systems, missing or inoperable restraints, and provide maximum allowable loads for each restraint direction under various operational conditions.

Loading Considerations

The allowable weight for each zone is a function of the type of ULD that comes in contact with the forward and aft restraints, the load factors, the nominal gap and by the restraint and ULD capabilities.

Unless otherwise stated, the following guidelines must be followed to determine allowable loads in a zone.

- The operator determines the number of restraints available for each zone.
- For tables provided through the remainder of this subject, weights indicated in the column entitled “Maximum Load” may only be carried with all restraints at the ends of the zone operable.
- The allowable zone weight includes ULD tare. Any load in excess of the allowables specified herein must be restrained by additional tiedowns (refer to CHP-SEC 1-68-00x for tiedown information).
- Allowable weights may further be restricted by limitations in this manual.
- Restraints at the fwd and aft end of a string of containers may be missing at the same time. However, the most limiting allowable zonal load for a missing fwd or aft restraint must be used.
- Missing / inoperative restraints in the same direction cannot be adjacent (i.e. two adjacent side restraints or two adjacent vertical restraints at the forward or aft side of the ULD may not be missing or inoperative). Also, two restraints adjacent to a common corner cannot be missing / inoperable. If this condition exists, the allowable weight of the associated zone is 0 LB (0 KG).
- A missing / inoperative center lateral guide (BL 0.0) is equivalent to one missing restraint in the right lane and one missing restraint in the left lane when carrying all LD-2 containers in a zone. This shall not be interpreted as two adjacent missing restraints.

APPLICABLE CONFIGURATIONS
All

-BOEING PROPRIETARY-

FORWARD COMPARTMENT UNIT LOAD DEVICE LOAD LIMITS (Continued)

- When an outboard guide rail support or guide rail between supports is missing / inoperative, the reduction in allowable load is equivalent to the loss of a side restraint.
- To reduce inadvertent cargo movement, it is recommended that all available restraints, including lateral guides, in unoccupied positions be raised.

Missing / Inoperative Restraints

Maximum loads for unit load devices shown in this section assume all equipment is installed and operable. When equipment is missing or inoperable, allowable loading may be reduced. Certain instances of missing or inoperable equipment reduce the allowable loading to zero.

CAUTION CARE MUST BE EXERCISED DURING LOADING AND UNLOADING OF UNIT LOAD DEVICES WHEN EQUIPMENT IS MISSING / INOPERATIVE TO PREVENT DAMAGE TO AIRPLANE STRUCTURE. IT IS ADVISABLE THAT MALFUNCTIONING EQUIPMENT BE REPAIRED OR REPLACED TO PREVENT DAMAGE TO OPERATIVE EQUIPMENT.

The following equipment malfunctions do not constitute a load limit restriction:

- Jammed or missing sill and capstan rollers
- Jammed or missing balls in a ball mat
- Jammed or missing rollers in a roller unit

Restraint systems fall into four categories: side restraints, side/vertical restraints, forward/aft restraints and forward/aft/vertical restraints. Each restraint direction is considered separately when missing / inoperative restraint equipment exists (i.e. forward, aft, side left, side right and vertical loading). When a missing or inoperative restraint condition exists, the allowable weight is determined by considering each restraint direction separately and using the most limiting resultant allowable weight.

Missing / inoperative restraints must not be adjacent to each other.

NOTE Zero capability still allows for the carriage of an empty ULD provided there is restraint in each forward, aft, side left and side right direction.

-BOEING PROPRIETARY-

FORWARD COMPARTMENT UNIT LOAD DEVICE LOAD LIMITS (Continued)

Forward and Aft Restraints (Pounds) - Size Codes K, P & Q

The following table shows the maximum allowable zone weights, in pounds, with missing or inoperative forward / aft restraints:

MAXIMUM ALLOWABLE LOADS WITH MISSING / INOPERATIVE RESTRAINTS SIZE CODES K, P & Q - LB									
ZONE	B.A. IN.	GAP IN.	NO. OF POSITIONS	LOAD TYPE [a]	MAXIMUM LOAD[b]	NO. OF RESTRAINTS MISSING / INOPERABLE			
						1 FWD	2 FWD[c]	1 AFT	2 AFT[C]
A	235.8 to 296.5	0.3	1	(1)	2700	2700	1800[d]	1350	0
				(2)	3500	3500	3500	2330	1170
				(3)	5400	5400	5400	4050	2700
B	235.8 to 357.1	0.5	2	(1)	5400	3600	1800[d]	2700	0
				(2)	7000	5250	3500	4670	2330
				(3)	10800	8640	6480	8100	5400
C	235.8 to 361.1	4.4	2	(1)	5400	3600	1800[d]	2700	0
				(2)	7000	5250	3500	4670	2330
				(3)	10800	8640	6480	8100	5400
D	235.8 to 362.6	6.0	2	(1)	5400	3600	1800[d]	2700	0
				(2)	7000	5250	3500	3500	0
				(3)	10800	8640	6480	7200	3600
E-H		gap >8”			Zero allowable load due to large gap				
I	364.3 to 426.1	1.3	1	(1)	2700	1350	0	1350	0
				(2)	3500	2330	1170	1750	0
				(3)	5400	4050	2700	3600	1800
J	364.3 to 489.7	4.5	2	(1)	5400	2700	0	2700	0
				(2)	7000	4670	2330	4670	2330
				(3)	10800	8100	5400	8100	5400
K-L		gap >8”			Zero allowable load due to large gap				
M	364.4 to 426.1	1.3	1	(1)	2700	1350	0	1350	0
				(2)	3500	1750	0	1750	0
				(3)	5400	3600	1800	3600	1800
N	364.4 to 489.7	4.4	2	(1)	5400	2700	0	2700	0
				(2)	7000	3500	0	4670	2330
				(3)	10800	7200	3600	8100	5400
O-P		gap >8”			Zero allowable load due to large gap				
Q	427.9 to 489.7	1.3	1	(1)	2700	2700	0	1350	0
				(2)	3500	3500	0	2330	1170
				(3)	5400	5400	5400	4050	2700
R	427.9 to 615.7	6.6	3	(1)	8100	4050	0	5400	2700[d]
				(2)	10500	5250	0	7875	5250
				(3)	16200	10800	5400	12960	9720
S		gap >8”			Zero allowable load due to large gap				

APPLICABLE CONFIGURATIONS
All

-BOEING PROPRIETARY-

FORWARD COMPARTMENT UNIT LOAD DEVICE LOAD LIMITS (Continued)

MAXIMUM ALLOWABLE LOADS WITH MISSING / INOPERATIVE RESTRAINTS SIZE CODES K, P & Q - LB (Continued)									
ZONE	B.A. IN.	GAP IN.	NO. OF POSITIONS	LOAD TYPE [a]	MAXIMUM LOAD[b]	NO. OF RESTRAINTS MISSING / INOPERABLE			
						1 FWD	2 FWD[c]	1 AFT	2 AFT[C]
T	434.2 to 615.7	0.3	3	(1)	8100	6750	0	5400	2700[d]
				(2)	10500	10500	3500	7550	5250
				(3)	16200	16200	8100	12960	9720
U	434.2 to 741.7	5.5	5	(1)	13500	6750	0	9000	4500[d]
				(2)	17500	11670	5830	13130	8750
				(3)	27000	20250	13500	21600	16200
V	490.5 to 615.7	4.49	2	(1)	5400	2700	0	3600	1800[d]
				(2)	7000	4670	2330	5250	3500
				(3)	10800	8100	5400	8640	6480
W-X		gap >8”			Zero allowable load due to large gap				
Y	496.6 to 741.7	3.5	4	(1)	10800	5400	0	9000	4500[d]
				(2)	14000	9330	4670	13130	8750
				(3)	21600	16200	10800	21600	16200
Z	555.0 to 615.7	0.3	1	(1)	2700	2700	0	1800	900[d]
				(2)	3500	3500	1170	2630	1750
				(3)	5400	5400	2700	4320	3240
AA	555.0 to 741.7	5.5	3	(1)	8100	4050	0	8100	4500
				(2)	10500	7000	3500	10500	8750[d]
				(3)	16200	12150	8100	16200	16200
AB	616.5 to 741.7	4.4	2	(1)	5400	3600	1800[d]	5400	4500[d]
				(2)	7000	5250	3500	7000	7000
				(3)	10800	8640	6480	10800	10800
AC	681.0 to 741.7	0.3	1	(1)	2700	1350	0	2700	2700[d]
				(2)	3500	2330	1170	3500	3500
				(3)	5400	4050	2700	5400	5400

[a] The load types are defined as follows: (1) Represents the allowable weights in the left or right lane when the fwd/aft end of a zone is occupied by an LD-2 container and no LD-4/LD-8 containers are intermixed; (2) Represents the allowable weights when the fwd/aft end of a zone is occupied by LD-1/LD-3 containers; and (3) Represents the allowable weights when either the fwd/aft end of a zone is occupied by an LD-4/LD-8 container or a pair of LD-2 containers (note that the pair of LD-2 containers cannot be adjacent to a missing/inoperative restraint).

[b] All restraints are operational.

[c] Only one restraint may be missing from each side. Missing / inoperative restraints must not be adjacent to each other.

[d] For left lane only. Allowable loads in right lane are 0 LB.

APPLICABLE CONFIGURATIONS
All

-BOEING PROPRIETARY-

FORWARD COMPARTMENT UNIT LOAD DEVICE LOAD LIMITS (Continued)

Forward and Aft Restraints (Kilograms) - Size Codes K, P & Q

The following table shows the maximum allowable zone weights, in kilograms, with missing or inoperative forward / aft restraints:

MAXIMUM ALLOWABLE LOADS WITH MISSING / INOPERATIVE RESTRAINTS SIZE CODES K, P & Q - KG									
ZONE	B.A. IN.	GAP IN.	NO. OF POSITIONS	LOAD TYPE [a]	MAXIMUM LOAD[b]	NO. OF RESTRAINTS MISSING / INOPERABLE			
						1 FWD	2 FWD[c]	1 AFT	2 AFT[C]
A	235.8 to 296.5	0.3	1	(1)	1224	1224	816[d]	612	0
				(2)	1587	1587	1587	1056	530
				(3)	2449	2449	2449	1837	1224
B	235.8 to 357.1	0.5	2	(1)	2449	1632	816[d]	1224	0
				(2)	3175	2381	1587	2118	1056
				(3)	4898	3919	2939	3674	2449
C	235.8 to 361.1	4.4	2	(1)	2449	1632	816[d]	1224	0
				(2)	3175	2381	1587	2118	1056
				(3)	4898	3919	2939	3674	2449
D	235.8 to 362.6	6.0	2	(1)	2449	1632	816[d]	1224	0
				(2)	3175	2381	1587	1587	0
				(3)	4898	3919	2939	3265	1632
E-H		gap >8”			Zero allowable load due to large gap				
I	364.3 to 426.1	1.3	1	(1)	1224	612	0	612	0
				(2)	1587	1056	530	793	0
				(3)	2449	1837	1224	1632	816
J	364.3 to 489.7	4.5	2	(1)	2449	1224	0	1224	0
				(2)	3175	2118	1056	2118	1056
				(3)	4898	3674	2449	3674	2449
K-L		gap >8”			Zero allowable load due to large gap				
M	364.4 to 426.1	1.3	1	(1)	1224	612	0	612	0
				(2)	1587	793	0	793	0
				(3)	2449	1632	816	1632	816
N	364.4 to 489.7	4.4	2	(1)	2449	1224	0	1224	0
				(2)	3175	1587	0	2118	1056
				(3)	4898	3265	1632	3674	2449
O-P		gap >8”			Zero allowable load due to large gap				
Q	427.9 to 489.7	1.3	1	(1)	1224	1224	0	612	0
				(2)	1587	1587	0	1056	530
				(3)	2449	2449	2449	1837	1224
R	427.9 to 615.7	6.6	3	(1)	3674	1837	0	2449	1224[d]
				(2)	4762	2381	0	3572	2381
				(3)	7348	4898	2449	5878	4408
S		gap >8”			Zero allowable load due to large gap				

APPLICABLE CONFIGURATIONS
All

-BOEING PROPRIETARY-

FORWARD COMPARTMENT UNIT LOAD DEVICE LOAD LIMITS (Continued)

MAXIMUM ALLOWABLE LOADS WITH MISSING / INOPERATIVE RESTRAINTS SIZE CODES K, P & Q - KG (Continued)									
ZONE	B.A. IN.	GAP IN.	NO. OF POSITIONS	LOAD TYPE [a]	MAXIMUM LOAD[b]	NO. OF RESTRAINTS MISSING / INOPERABLE			
						1 FWD	2 FWD[c]	1 AFT	2 AFT[C]
T	434.2 to 615.7	0.3	3	(1)	3674	3061	0	2449	1224[d]
				(2)	4762	4762	1587	3424	2381
				(3)	7348	7348	3674	5878	4408
U	434.2 to 741.7	5.5	5	(1)	6123	3061	0	4082	2041[d]
				(2)	7937	5293	2644	5955	3968
				(3)	12246	9185	6123	9797	7348
V	490.5 to 615.7	4.49	2	(1)	2449	1224	0	1632	816[d]
				(2)	3175	2118	1056	2381	1587
				(3)	4898	3674	2449	3919	2939
W-X		gap >8”			Zero allowable load due to large gap				
Y	496.6 to 741.7	3.5	4	(1)	4898	2449	0	4082	2041[d]
				(2)	6350	4232	2118	5955	3968
				(3)	9797	7348	4898	9797	7348
Z	555.0 to 615.7	0.3	1	(1)	1224	1224	0	816	408[d]
				(2)	1587	1587	530	1192	793
				(3)	2449	2449	1224	1959	1469
AA	555.0 to 741.7	5.5	3	(1)	3674	1837	0	3674	2041
				(2)	4762	3175	1587	4762	3968[d]
				(3)	7348	5511	3674	7348	7348
AB	616.5 to 741.7	4.4	2	(1)	2449	1632	816	2449	2041[d]
				(2)	3175	2381	1587	3175	3175
				(3)	4898	3919	2939	4898	4898
AC	681.0 to 741.7	0.3	1	(1)	1224	612	0	1224	1224[d]
				(2)	1587	1056	530	1587	1587
				(3)	2449	1837	1224	2449	2449

[a] The load types are defined as follows: (1) Represents the allowable weights in the left or right lane when the fwd/aft end of a zone is occupied by an LD-2 container and no LD-4/LD-8 containers are intermixed; (2) Represents the allowable weights when the fwd/aft end of a zone is occupied by LD-1/LD-3 containers; and (3) Represents the allowable weights when either the fwd/aft end of a zone is occupied by an LD-4/LD-8 container or a pair of LD-2 containers (note that the pair of LD-2 containers cannot be adjacent to a missing/inoperative restraint).

[b] All restraints are operational.

[c] Only one restraint may be missing from each side. Missing / inoperative restraints must not be adjacent to each other.

[d] For left lane only. Allowable loads in right lane are 0 LB.

APPLICABLE CONFIGURATIONS
All

-BOEING PROPRIETARY-

FORWARD COMPARTMENT UNIT LOAD DEVICE LOAD LIMITS (Continued)

Side Restraint - Size Codes K, P & Q

The following table shows the maximum allowable unit load device weights with missing or inoperative side restraints.

MAXIMUM ALLOWABLE LOAD WITH MISSING / INOPERATIVE SIDE RESTRAINTS SIZE CODES K, P & Q							
TYPE OF RESTRAINT	NUMBER OF OPERATIVE RESTRAINTS	UNIT LOAD DEVICE SIZE CODE					
		K		P		Q	
		LB	KG	LB	KG	LB	KG
Roll-out Stops	2			2700	1224	5400	2449
	1			2700	1224	5400	2449
	0			0	0	0	0
Center Stop / Center Guide	3			2700	1224		
	2			2700	1224		
	1			2700	1224		
	0			0	0		
Auxiliary Stop / Guide	3	3500	1587				
	2	3500	1587				
	1	3500	1587				
	0	0	0				
Side Rail / Side Guide	3	3500	1587	2700	1224	5400	2449
	2	3500	1587	2700	1224	5400	2449
	1	3500	1587	2700	1224	3500	1587
	0	0	0	0	0	0	0

NOTE There are no restrictions when only the vertical restraint part of the restraint equipment is missing or inoperable.

APPLICABLE CONFIGURATIONS
All

-BOEING PROPRIETARY-

FORWARD COMPARTMENT UNIT LOAD DEVICE LOAD LIMITS

CARGO RESTRAINT SYSTEM - SIZE CODES A, L & M

The illustration below identifies the locations of the stops / locks / guides and the associated pallet positions for size codes A, L & M.

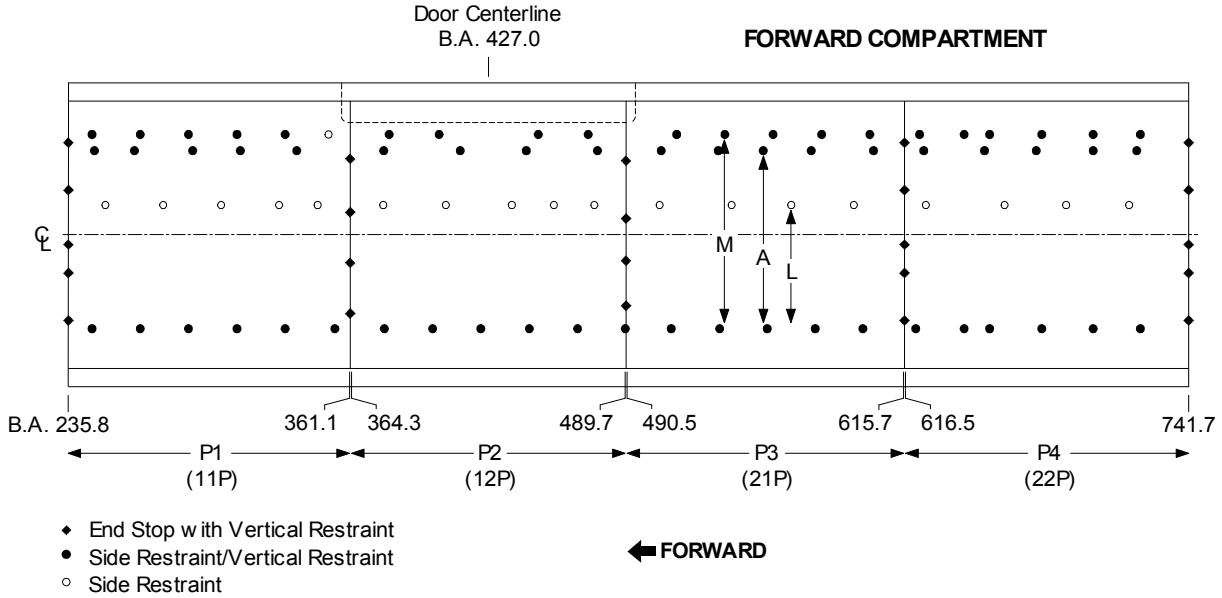

NOTE Position markings contained within parenthesis ( ) are equivalent IATA markings.

LOAD LIMITS - SIZE CODES A, L & M

The remaining sections of this subject describe loading considerations, restraint systems, missing or inoperable restraints, and provide maximum allowable loads for each restraint direction under various operational conditions.

APPLICABLE CONFIGURATIONS
All

-BOEING PROPRIETARY-

FORWARD COMPARTMENT UNIT LOAD DEVICE LOAD LIMITS (Continued)

Loading Considerations

The allowable weight for each pallet position is a function of the restraint capabilities, the load factors, and the ULD capabilities.

Unless otherwise stated, the following guidelines must be followed to determine allowable loads in a pallet position.

- The operator determines the number of restraints available for each pallet position.
- For tables provided through the remainder of this subject, weights indicated in the column entitled "Maximum Load" may only be carried with all restraints operable.
- The allowable pallet position weight includes ULD tare. Any load in excess of the allowables specified herein must be restrained by additional tiedowns (refer to CHP-SEC 1-68-xxx for tiedown information). Size Code L pallets less than 63 inches in height and with a load greater than 5000 LB (2267 KG), must be restrained vertically by additional tiedowns.
- Allowable weights may further be restricted by limitations in this manual.
- Missing / inoperative restraints in the same direction cannot be adjacent (i.e. two adjacent side restraints or two adjacent vertical restraints may not be missing or inoperative). Also, two vertical restraints adjacent to a common corner cannot be missing / inoperable. If either of these conditions exists, the pallet must be tied down or its allowable weight is 0 LB (0 KG).
- The ULD must be restrained along all four sides except size code “L” which requires three sides only.
- A missing side guide rail will cause the allowable weight to be 0 LB (0 KG).
- Use of ULD’s not specified in this manual require tiedowns for the ULD’s gross weight and the specified load factors.
- An empty ULD can be carried in any position provided at least one restraint is operable in each (forward, aft, left and right) direction. In addition, ULDs less than 63 inches in height require one vertical restraint on each edge (forward, aft, left and right) to be operable except size code “L” which requires three sides only (forward, aft and left).
- To reduce inadvertent cargo movement, it is recommended that all available restraints, including lateral guides, in unoccupied positions be raised.

APPLICABLE CONFIGURATIONS
All

-BOEING PROPRIETARY-

FORWARD COMPARTMENT UNIT LOAD DEVICE LOAD LIMITS (Continued)

Missing / Inoperative Restraints

Maximum loads for unit load devices shown in this section assume all equipment is installed and operable. When equipment is missing or inoperable, allowable loading may be reduced. Certain instances of missing or inoperable equipment reduce the allowable loading to zero.

CAUTION CARE MUST BE EXERCISED DURING LOADING AND UNLOADING OF UNIT LOAD DEVICES WHEN EQUIPMENT IS MISSING / INOPERATIVE TO PREVENT DAMAGE TO AIRPLANE STRUCTURE. IT IS ADVISABLE THAT MALFUNCTIONING EQUIPMENT BE REPAIRED OR REPLACED TO PREVENT DAMAGE TO OPERATIVE EQUIPMENT.

The following equipment malfunctions do not constitute a load limit restriction:

- Jammed or missing sill rollers and capstan rollers
- Jammed or missing balls in a ball mat
- Jammed or missing rollers in a roller unit

Restraint systems fall into four categories: side restraints, side/vertical restraints, forward/aft restraints, and forward/aft/vertical restraints. Each restraint direction is considered separately when missing / inoperative restraint equipment exists (i.e. forward, aft, side left, side right and vertical loading). When a missing or inoperative restraint condition exists, the allowable weight is determined by considering each restraint direction separately and using the most limiting resultant allowable weight.

Missing / inoperative restraints must not be adjacent to each other.

A lock is considered to be fully effective at the corner of a ULD if the centerline of the lockhead lines up with the tangent of the ULD corner radius.

NOTE Zero capability still allows for the carriage of an empty ULD provided at least one restraint is operable in each forward, aft, side left and side right direction. In addition, ULD's less than 63 inches in height require one vertical restraint on each edge (forward, aft, side left and side right) to be operable.

APPLICABLE CONFIGURATIONS
All

-BOEING PROPRIETARY-

FORWARD COMPARTMENT UNIT LOAD DEVICE LOAD LIMITS (Continued)

Size Codes A, L & M

The following table shows the maximum allowable pallet position weights with missing or inoperative restraints:

MAXIMUM ALLOWABLE LOADS WITH MISSING / INOPERATIVE RESTRAINTS ALL PALLET POSITIONS							
RESTRAINT		SIZE CODES					
		LB			KG		
DIRECTION	NUMBER OPERABLE	A	L	M	A	L	M
Maximum Load		11250	7000[a]	11250	5102	3175[a]	5102
Vertical[b]	21-19			11250			5102
	18	11250		11250	5102		5102
	17	11250		11250	5102		5102
	16	10588		10588	4802		4802
	15	9926		9926	4502		4502
	14	9265		9265	4202		4202
	13	8603		8603	3902		3902
	12	7941		7941	3601		3601
	11	7279	7000	7279	3301	3175	3301
	10	6618	7000	6618	3001	3175	3001
	9	5956	6300	5956	2701	2857	2701
	8	0	5600	0	0	2540	0
	7	0	4900	0	0	2222	0
	6	0	4200	0	0	1905	0
	5	0	3500	0	0	1587	0
	4	0	0	0	0	0	0
Forward	5			11250			5102
	4	11250		11250	5102		5102
	3	8438	7000	8438	3827	3175	3827
	2	5625	4670	5625	2551	2118	2551
	1	0	0	0	0	0	0
Aft	5			11250			5102
	4	11250		11250	5102		5102
	3	8438	7000	8438	3827	3175	3827
	2	5625	4670	5625	2551	2118	2551
	1	0	0	0	0	0	0
Left	6-5	11250	7000	11250	5102	3175	5102
	4	9000	5600	9000	4082	2540	4082
	3	6750	4200	6750	3061	1905	3061
	2	4500	2800	4500	2041	1270	2041
	1	0	0	0	0	0	0
Right	6			11250			5102
	5	11250	7000	11250	5102	3175	5102
	4	11250	7000	11250	5102	3175	5102
	3	8438	5250	8438	3827	2381	3827
	2	5625	3500	5625	2551	1587	2551
	1	0	0	0	0	0	0

[a] Size Code L pallets less than 63 inches in height are limited to 5000 LB (2267 KG)
[b] Vertical direction limitations apply only to containers less than 63 inches in height and to pallets.

APPLICABLE CONFIGURATIONS
All

-BOEING PROPRIETARY-

AFT COMPARTMENT UNIT LOAD DEVICE LOAD LIMITS

CARGO RESTRAINT SYSTEM - SIZE CODES K, P & Q

The longitudinal area between each combination of fwd / aft restraints is referred to as a zone. All zones in a cargo compartment are unique, and all restraints within the boundaries of a zone are either down or inoperable. The illustration below identifies the locations of the stops / locks / guides and the associated zones for size codes K, P & Q.

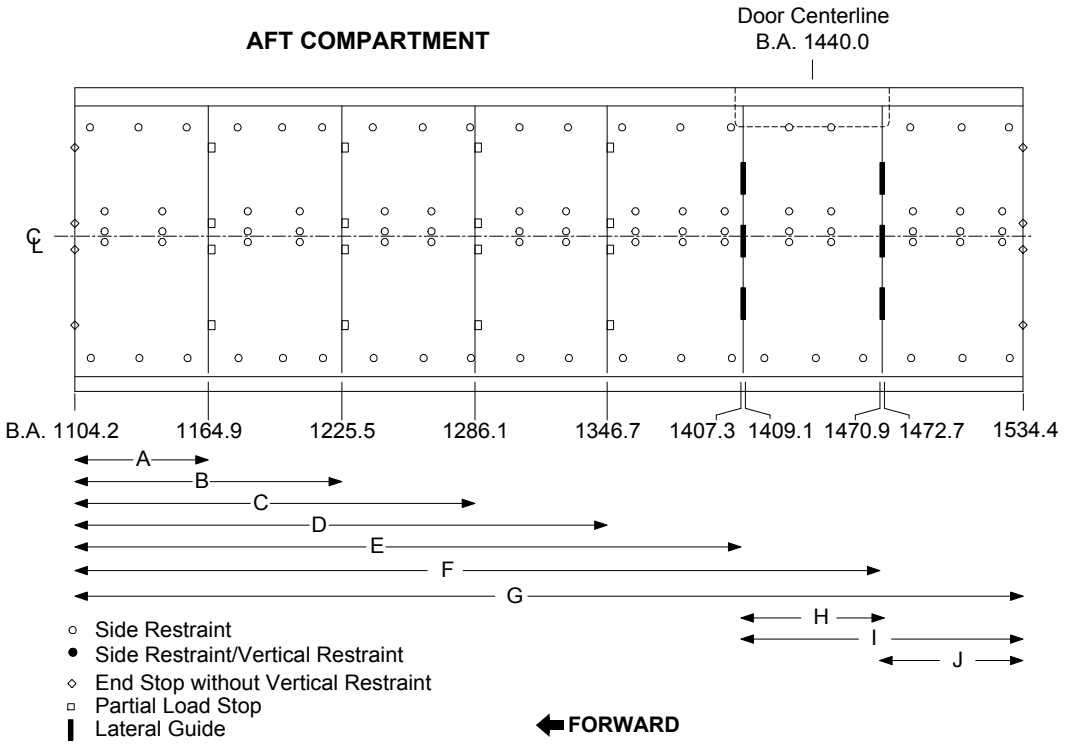

Unit Load Device Intermixing

Size codes K, P & Q containers can be intermixed within a zone, provided that:

- All restraints are operable.
- An LD-2 container cannot be located on the right side of the compartment with an LD-1 or LD-3 container located forward or aft of it.
- LD-2 containers must be loaded in pairs when placed forward or aft of an LD-4 or LD-8 container.

If a fwd / aft restraint is broken or inoperative, containers can still be intermixed provided:

- The allowable zonal load per the missing restraint section is not exceeded.
- Only LD-1, LD-3, LD-4 or LD-8 containers are at the end of a string of containers at which a restraint is missing or inoperative. Do not place a pair of LD-2 containers (side by side) against inoperative restraints when intermixing containers.

APPLICABLE CONFIGURATIONS
All

-BOEING PROPRIETARY-

AFT COMPARTMENT UNIT LOAD DEVICE LOAD LIMITS (Continued)

LOAD LIMITS - SIZE CODES K, P & Q

The remaining sections of this subject describe loading considerations, restraint systems, missing or inoperable restraints, and provide maximum allowable loads for each restraint direction under various operational conditions.

Loading Considerations

The allowable weight for each zone is a function of the type of ULD that comes in contact with the forward and aft restraints, the load factors, the nominal gap and by the restraint and ULD capabilities.

Unless otherwise stated, the following guidelines must be followed to determine allowable loads in a zone.

- The operator determines the number of restraints available for each zone.
- For tables provided through the remainder of this subject, weights indicated in the column entitled “Maximum Load” may only be carried with all restraints at the ends of the zone operable.
- The allowable zone weight includes ULD tare. Any load in excess of the allowables specified herein must be restrained by additional tiedowns (refer to CHP-SEC 1-68-00x for tiedown information).
- Allowable weights may further be restricted by limitations in this manual.
- Restraints at the fwd and aft end of a string of containers may be missing at the same time. However, the most limiting allowable zonal load for a missing fwd or aft restraint must be used.
- Missing / inoperative restraints in the same direction cannot be adjacent (i.e. two adjacent side restraints or two adjacent vertical restraints at the forward or aft side of the ULD may not be missing or inoperative). Also, two restraints adjacent to a common corner cannot be missing / inoperable. If this condition exists, the allowable weight of the associated zone is 0 LB (0 KG).
- A missing / inoperative center lateral guide (BL 0.0) is equivalent to one missing restraint in the right lane and one missing restraint in the left lane when carrying all LD-2 containers in a zone. This shall not be interpreted as two adjacent missing restraints.
- When an outboard guide rail support or guide rail between supports is missing / inoperative, the reduction in allowable load is equivalent to the loss of a side restraint.
- To reduce inadvertent cargo movement, it is recommended that all available restraints, including lateral guides, in unoccupied positions be raised.

APPLICABLE CONFIGURATIONS
All

-BOEING PROPRIETARY-

AFT COMPARTMENT UNIT LOAD DEVICE LOAD LIMITS (Continued)

Missing / Inoperative Restraints

Maximum loads for unit load devices shown in this section assume all equipment is installed and operable. When equipment is missing or inoperable, allowable loading may be reduced. Certain instances of missing or inoperable equipment reduce the allowable loading to zero.

CAUTION CARE MUST BE EXERCISED DURING LOADING AND UNLOADING OF UNIT LOAD DEVICES WHEN EQUIPMENT IS MISSING / INOPERATIVE TO PREVENT DAMAGE TO AIRPLANE STRUCTURE. IT IS ADVISABLE THAT MALFUNCTIONING EQUIPMENT BE REPAIRED OR REPLACED TO PREVENT DAMAGE TO OPERATIVE EQUIPMENT.

The following equipment malfunctions do not constitute a load limit restriction:

- Jammed or missing sill and capstan rollers
- Jammed or missing balls in a ball mat
- Jammed or missing rollers in a roller unit

Restraint systems fall into four categories: side restraints, side/vertical restraints, forward/aft restraints, and forward/aft/vertical restraints. Each restraint direction is considered separately when missing / inoperative restraint equipment exists (i.e. forward, aft, side left, side right and vertical loading). When a missing or inoperative restraint condition exists, the allowable weight is determined by considering each restraint direction separately and using the most limiting resultant allowable weight.

Missing / inoperative restraints must not be adjacent to each other.

NOTE Zero capability still allows for the carriage of an empty ULD provided there is restraint in each forward, aft, side left and side right direction.

-BOEING PROPRIETARY-

AFT COMPARTMENT UNIT LOAD DEVICE LOAD LIMITS (Continued)

Forward and Aft Restraints (Pounds) - Size Codes K, P & Q

The following table shows the maximum allowable zone weights, in pounds, with missing or inoperative forward / aft restraints:

MAXIMUM ALLOWABLE LOADS WITH MISSING / INOPERATIVE RESTRAINTS SIZE CODES K, P & Q - LB									
ZONE	B.A. IN.	GAP IN.	NO. OF POSITIONS	LOAD TYPE [a]	MAXIMUM LOAD[b]	NO. OF RESTRAINTS MISSING / INOPERABLE			
						1 FWD	2 FWD[c]	1 AFT	2 AFT[C]
A	1104.2 to 1164.9	0.3	1	(1)	2700	2700	0	1350	0
				(2)	3500	3500	3500	2330	1170
				(3)	5400	5400	5400	4050	2700
B	1104.2 to 1225.5	0.5	2	(1)	5400	5400	0	2700	0
				(2)	7000	7000	5830	4670	2330
				(3)	10800	10800	10800	8100	5400
C	1104.2 to 1286.1	0.7	3	(1)	8100	6750	0	4050	0
				(2)	10500	10500	5830	7000	3500
				(3)	16200	16200	13500	12150	8100
D	1104.2 to 1346.7	0.9	4	(1)	10800	6750	0	5400	0
				(2)	14000	11670	5830	9330	4670
				(3)	21600	20250	10800	16200	10800
E	1104.2 to 1407.3	1.1	5	(1)	13500	6750	0	6750	0
				(2)	17500	11670	5830	11670	0
				(3)	27000	20250	13500	20250	9000
F	1104.2 to 1470.9	4.3	6	(1)	16200	8100	0	8100	0
				(2)	21000	14000	7000	10500	0
				(3)	32400	24300	16200	21600	10800
G	1104.2 to 1534.4	7.4	7	(1)	18900	9450	0	9450	0
				(2)	24500	16330	8170	16330	8170
				(3)	37800	28350	18900	28350	18900
H	1409.1 to 1470.9	1.4	1	(1)	2700	1350	0	1350	0
				(2)	3500	1750	0	1750	0
				(3)	5400	3600	1800	3600	1800
I	1409.1 to 1534.4	4.5	2	(1)	5400	2700	0	2700	0
				(2)	7000	3500	0	4670	2330
				(3)	10800	7200	3600	8100	5440
J	1472.7 to 1534.4	1.3	1	(1)	2700	1350	0	1350	0
				(2)	3500	1750	0	2330	1170
				(3)	5400	3600	1800	4050	2700

[a] The load types are defined as follows: (1) Represents the allowable weights in the left or right lane when the fwd/aft end of a zone is occupied by an LD-2 container and no LD-4/LD-8 containers are intermixed; (2) Represents the allowable weights when the fwd/aft end of a zone is occupied by LD-1/LD-3 containers; and (3) Represents the allowable weights when either the fwd/aft end of a zone is occupied by an LD-4/LD-8 container or a pair of LD-2 containers (note that the pair of LD-2 containers cannot be adjacent to a missing/inoperative restraint).

[b] All restraints are operational.

[c] Only one restraint may be missing from each side. Missing / inoperative restraints must not be adjacent to each other.

APPLICABLE CONFIGURATIONS
All

-BOEING PROPRIETARY-

AFT COMPARTMENT UNIT LOAD DEVICE LOAD LIMITS (Continued)

Forward and Aft Restraints (Kilograms) - Size Codes K, P, & Q

The following table shows the maximum allowable zone weights, in kilograms, with missing or inoperative forward / aft restraints:

MAXIMUM ALLOWABLE LOADS WITH MISSING / INOPERATIVE RESTRAINTS SIZE CODES K, P & Q - KG									
ZONE	B.A. IN.	GAP IN.	NO. OF POSITIONS	LOAD TYPE [a]	MAXIMUM LOAD[b]	NO. OF RESTRAINTS MISSING / INOPERABLE			
						1 FWD	2 FWD[c]	1 AFT	2 AFT[C]
A	1104.2 to 1164.9	0.3	1	(1)	1224	1224	0	612	0
				(2)	1587	1587	1587	1056	530
				(3)	2449	2449	2449	1837	1224
B	1104.2 to 1225.5	0.5	2	(1)	2449	2449	0	1224	0
				(2)	3175	3175	2644	2118	1056
				(3)	4898	4898	4898	3674	2449
C	1104.2 to 1286.1	0.7	3	(1)	3674	3061	0	1837	0
				(2)	4762	4762	2644	3175	1587
				(3)	7348	7348	6123	5511	3674
D	1104.2 to 1346.7	0.9	4	(1)	4898	3061	0	2449	0
				(2)	6350	5293	2644	4232	2118
				(3)	9797	9185	4898	7348	4898
E	1104.2 to 1407.3	1.1	5	(1)	6123	3061	0	3061	0
				(2)	7937	5293	2644	5293	0
				(3)	12246	9185	6123	9185	4082
F	1104.2 to 1470.9	4.3	6	(1)	7348	3674	0	3674	0
				(2)	9525	6350	3175	4762	0
				(3)	14696	11022	7348	9797	4898
G	1104.2 to 1534.4	7.4	7	(1)	8572	4286	0	4286	0
				(2)	11113	7407	3705	7407	3705
				(3)	17145	12859	8572	12859	8572
H	1409.1 to 1470.9	1.4	1	(1)	1224	612	0	612	0
				(2)	1587	793	0	793	0
				(3)	2449	1632	816	1632	816
I	1409.1 to 1534.4	4.5	2	(1)	2449	1224	0	1224	0
				(2)	3175	1587	0	2118	1056
				(3)	4898	3265	1632	3674	2467
J	1472.7 to 1534.4	1.3	1	(1)	1224	612	0	612	0
				(2)	1587	793	0	1056	530
				(3)	2449	1632	816	1837	1224

[a] The load types are defined as follows: (1) Represents the allowable weights in the left or right lane when the fwd/aft end of a zone is occupied by an LD-2 container and no LD-4/LD-8 containers are intermixed; (2) Represents the allowable weights when the fwd/aft end of a zone is occupied by LD-1/LD-3 containers; and (3) Represents the allowable weights when either the fwd/aft end of a zone is occupied by an LD-4/LD-8 container or a pair of LD-2 containers (note that the pair of LD-2 containers cannot be adjacent to a missing/inoperative restraint).

[b] All restraints are operational.

[c] Only one restraint may be missing from each side. Missing / inoperative restraints must not be adjacent to each other.

APPLICABLE CONFIGURATIONS
All

-BOEING PROPRIETARY-

AFT COMPARTMENT UNIT LOAD DEVICE LOAD LIMITS (Continued)

Side Restraint - Size Codes K, P & Q

The following table shows the maximum allowable unit load device weights with missing or inoperative side restraints.

MAXIMUM ALLOWABLE LOAD WITH MISSING / INOPERATIVE SIDE RESTRAINTS SIZE CODES K, P & Q							
TYPE OF RESTRAINT	NUMBER OF OPERATIVE RESTRAINTS	UNIT LOAD DEVICE SIZE CODE					
		K		P		Q	
		LB	KG	LB	KG	LB	KG
Roll-out Stops	2			2700	1224	5400	2449
	1			2700	1224	4900	2222
	0			0	0	0	0
Center Stop / Center Guide	3			2700	1224		
	2			2700	1224		
	1			2500	1133		
	0			0	0		
Auxiliary Stop / Guide	3	3500	1587				
	2	3500	1587				
	1	3200	1451				
	0	0	0				
Side Rail / Side Guide	3	3500	1587	2700	1224	5400	2449
	2	3500	1587	2700	1224	5400	2449
	1	3500	1587	2700	1224	3600	1632
	0	0	0	0	0	0	0

NOTE There are no restrictions when only the vertical restraint part of the restraint equipment is missing or inoperable.

APPLICABLE CONFIGURATIONS
All

-BOEING PROPRIETARY-

CARGO TIEDOWNS - LOWER DECK

GENERAL INFORMATION

A Certified Unit Load Device (ULD) will not require tiedowns unless one of the following conditions exist:

- The ULD contains cargo of such shape and/or densities as to pose a hazard to the airplane structure or systems. If so, the entire weight of the ULD and its cargo must be tied down.
- The ULD is limited either by restraint configurations or by missing / inoperative restraints. If so, the weight in excess of the ULD load limit data in CHP-SEC 1-66-xxx, must be tied down.
- The ULD does not satisfy the center of gravity limitations in CHP-SEC 1-63-xxx. If so, the entire weight of the ULD and its cargo must be tied down.

A non-certified ULD will not require tiedowns unless one of the following conditions exist:

- The ULD contains cargo of such shape and/or densities as to pose a hazard to the airplane structure or systems. If so, the entire weight of the ULD and its cargo must be tied down.
- The ULD is limited either by restraint configurations or by missing / inoperative restraints. If so, the weight in excess of the ULD load limit data in CHP-SEC 1-66-xxx, must be tied down.
- The ULD does not satisfy the center of gravity limitations in CHP-SEC 1-63-xxx. If so, the entire weight of the ULD and its cargo must be tied down.
- The ULD is not specified in this manual. If so, the entire weight of the ULD and its cargo must be tied down.
- The ULD is less than 63” in height. If so, the entire weight of the ULD and its cargo must be tied down.
- The ULD is not serviceable, not well constructed, or loaded in a manner that could result in it being a hazard to the airplane structure or systems. If so, the entire weight of the ULD and its cargo must be tied down.

Bulk cargo will not require tiedowns unless one of the following conditions exist:

- The bulk cargo is loaded on rollers, balls or devices to assist in moving cargo within the compartment.
- The bulk cargo is of shape or density that could become a hazard to the airplane structure or systems (e.g. dense or piercing items that could become projectiles).
- Bulk cargo movement within the compartment due to operational loads would cause a large change in airplane C.G.

Good judgment must be used in selecting the location and number of tiedowns to give sufficient safety margin for uneven strap and net stretch, strap and cargo slippage, and for varying allowables of rings used in combination. To prevent overloading of hardware, ring loops should be correctly oriented as closely as possible to the strap direction.

CAUTION DO NOT MIX DIFFERENT STIFFNESSES OF TIEDOWN STRAPS (FOR EXAMPLE, KEVLAR AND NYLON WEBS) WHEN RESTRAINING CARGO. MIXING STRAP STIFFNESSES MAY CAUSE PREMATURE FAILURE OF THE STIFFER STRAP. THE USE OF CHAINS FOR TIEDOWNS IS NOT RECOMMENDED.

APPLICABLE CONFIGURATIONS
All

-BOEING PROPRIETARY-

CARGO TIEDOWNS - LOWER DECK (Continued)

TIEDOWN ALLOWABLES

The following sections describe the basic tiedown requirements and provide the tiedown fitting load limits.

Tiedown Requirements

The required tiedown load for each basic direction forward, aft, side (both directions) and up is determined from the following equation:

$$L = LF \times W$$

Where,

L = The applied load for a given direction
LF = The applicable load factor (from the table below)
W = The weight of the cargo to be tied down

The following table provides the load factors used to determine the applied load.

LOCATION	BALANCE ARM		LOAD FACTOR			
	FROM	TO	FWD	AFT	SIDE	UP
Forward Compartment	234.7	743.6	1.20	0.75	0.75	1.80
Aft Compartment	1085.2	1332.0	1.20	0.75	1.20	2.10
	1332.0	1432.0	1.20	0.75	1.30	2.20
	1432.0	1544.0	1.20	0.75	1.50	2.30
Bulk Compartment	1544.0	1671.2	1.20	0.75	1.60	2.60

The total restraint capability (i.e. sum of the tiedown strap capabilities) in each of these five basic restraint directions must be equal to or greater than the computed applied load in that direction. The operator is responsible to ensure that the strap tension rating and the strap attachment rating are each equal to or greater than the load limits of the airplane tiedown fittings used with the strap. Minimum allowable strap tension and strap attachment ratings of 5000 LB (2268 KG) are recommended.

CAUTION UNEVEN MASS DISTRIBUTION MUST BE ACCOUNTED FOR IN DETERMINING STRAP LOADS AND SELECTING TIEDOWN POINTS.

APPLICABLE CONFIGURATIONS
All

-BOEING PROPRIETARY-

CARGO TIEDOWNS - LOWER DECK (Continued)

Tiedown Fitting Load Limits

The following table summarizes tiedown fitting load limits as a function of the floor angle (refer to the "Tie-down Calculation" section on page 4 of this subject for an illustration of floor angle):

FLOOR ANGLE (DEGREES)	ALLOWABLE TENSION LOAD ON STRAP BY FITTING TYPE					
	ALL TIEDOWN FITTINGS[a]		FIXED END STOPS & PALLET LOCKS[b]		PALLET LOCKS[c]	
	LB	KG	LB	KG	LB	KG
0° (Horizontal)	2000	907	2000	907	2000	907
0° to 45°	Varies[d]	Varies[d]	Varies[e]	Varies[e]	0	0
45°	3000	1360	1700	771	0	0
45° to 90°	Varies[f]	Varies[f]	Varies[g]	Varies[g]	0	0
90° (Vertical)	4000	1814	1200	544	0	0

[a] These values apply to side guides, sill rollers, side guide rollers and all bulk compartment fittings. They also apply to pallet locks when no unit load devices are located against either the forward or aft edges of the pallet lock, and to fixed end stops when no unit load devices are located against the edge of the end stop.
[b] When a unit load device is located against the edge of the end stop or against only one edge of the pallet lock.
[c] When a unit load device is located against both the forward and aft edges of a pallet lock.
[d] Varies linearly between 2000 LB (907 KG) and 3000 LB (1360 KG).
[e] Varies linearly between 2000 LB (907 KG) and 1700 LB (771 KG).
[f] Varies linearly between 3000 LB (1360 KG) and 4000 LB (1814 KG).
[g] Varies linearly between 1700 LB (771 KG) and 1200 LB (544 KG).

The sum of the forward or aft components from any two adjacent tiedown fittings must not exceed 2000 LB (907 KG).

Example:

A tiedown strap attached to a side guide fitting has a floor angle of 30 degrees. The allowable strap tension load is calculated as follows:

$$2000\ \text{LB} + \left(1000\ \text{LB} \times \frac{30°}{45°}\right) = 2666\ \text{LB}$$

Similarly, the calculation using kilograms is:

$$907\ \text{KG} + \left(453\ \text{KG} \times \frac{30°}{45°}\right) = 1209\ \text{KG}$$

CARGO TIEDOWNS - LOWER DECK (Continued)

TIEDOWN CALCULATION

The following sections provide the methodology for determining the number of tiedown straps required for each of the basic restraint directions.

Tiedown Load Components

The illustration below shows tiedown angles and provides the equations used to calculate the allowable load component for each of the five basic restraint directions.

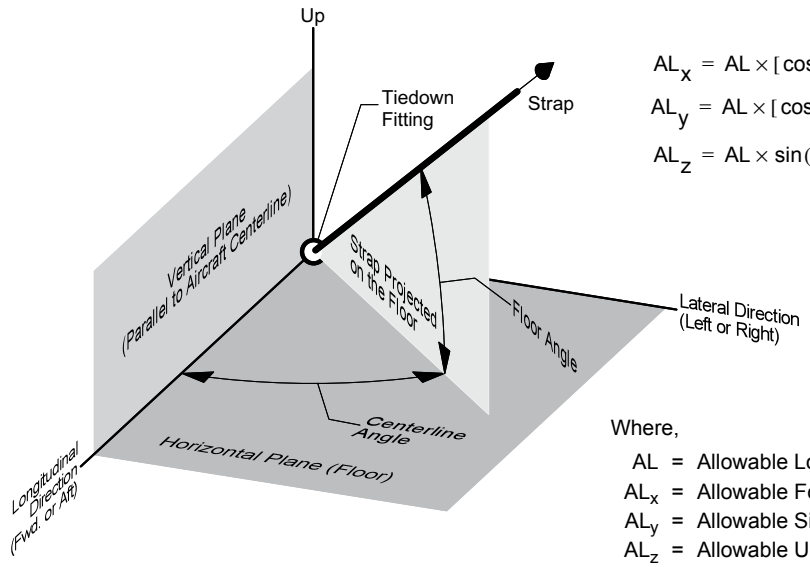

$$AL_x = AL \times [\cos(\text{Floor Angle}) \times \cos(\text{Centerline Angle})]$$

$$AL_y = AL \times [\cos(\text{Floor Angle}) \times \sin(\text{Centerline Angle})]$$

$$AL_z = AL \times \sin(\text{Floor Angle})$$

Where,

AL = Allowable Load
AL_x = Allowable Forward or Aft Load Component
AL_y = Allowable Side Load Component (either direction)
AL_z = Allowable Up Load Component

Calculation Procedure

The number of tiedowns required must be determined for each of the five basic restraint directions. The following steps outline the procedure for determining the number of tiedown straps required for a single restraint direction:

1. Determine the applied load using the equation and the load factors from the “Tiedown Allowables” section on page 2 of this subject.
2. Determine the allowable load based on the fitting type that will be used to restrain the cargo (refer to the “Tiedown Fitting Load Limits” section on page 3 of this subject). If different fitting types will be used for a single strap, use the more restrictive allowable load. Ensure that the allowable fitting load is less than the allowable strap rating.
3. Calculate the allowable load component using the appropriate equation from the above illustration in the “Tiedown Load Components” section.

APPLICABLE CONFIGURATIONS
All

-BOEING PROPRIETARY-

CARGO TIEDOWNS - LOWER DECK (Continued)

4. Determine the number of tiedown straps required using the equation provided below. The result must be rounded up to the nearest whole number.

$$\text{Number of Tiedown Straps} = \frac{\text{Applied Load (from Step 1)}}{2 \times \text{Allowable Load Component (from Step 3)}}$$

Tiedown Strap Orientation

The allowable orientation of the tiedown strap relative to the tiedown fitting is a function of the type of tie-down fitting. The following table defines the strap orientation restrictions for the various tiedown fittings.

SIDE GUIDES, SILL ROLLERS, GUIDE ROLLERS AND THE BULK COMPARTMENT	FIXED END STOPS AND PALLET LOCKS
The following figure illustrates allowable strap rotation about a vertical axis located at the center of the tiedown fitting. 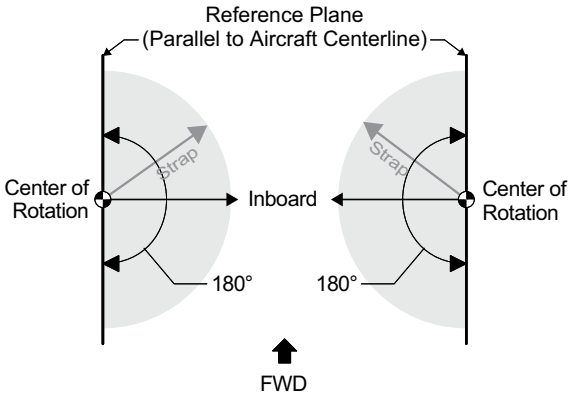 The shaded area shows the range of rotation of 180 degrees relative to a reference plane that is parallel to the centerline of the aircraft. The strap orientation must always be inboard of the reference plane.	The following figure illustrates allowable strap rotation about a vertical axis located at the center of the tiedown fitting. 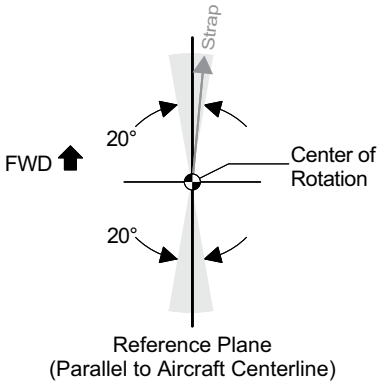 The shaded area shows the range of rotation of 20 degrees relative to a reference plane that is parallel to the centerline of the aircraft. The allowable range applied to straps oriented forward or aft of the tiedown fitting.

APPLICABLE CONFIGURATIONS
All

-BOEING PROPRIETARY-

CARGO TIEDOWNS - LOWER DECK (Continued)

TIEDOWN EXAMPLE

In the following example, a package weighs 3000 LB (1361 KG), and will be carried in the forward hold. Refer to CHP-SEC 1-60-20x for forward compartment capabilities. The package is to be restrained completely by the use of tiedowns rated at 5000 LB (2267 KG). The cargo mass is evenly distributed.

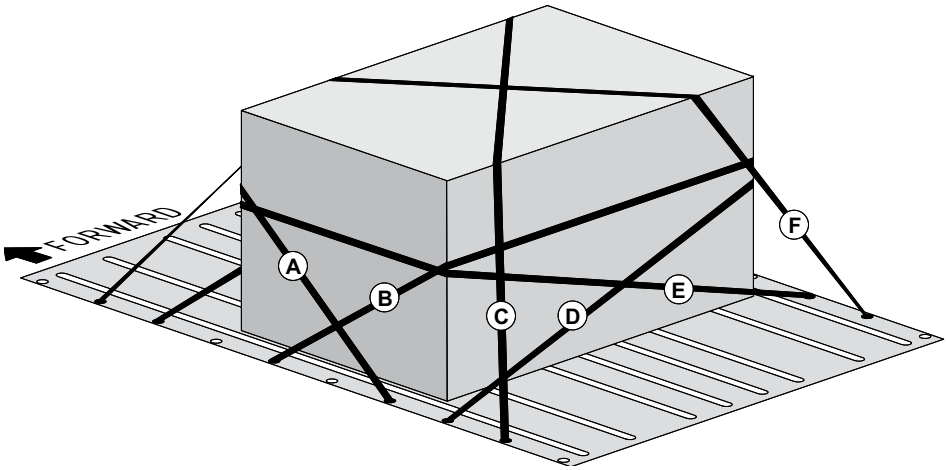

For this example, all tiedown straps are attached to side guide tiedown fittings. Strap information for the tiedown straps labeled A through F is summarized in the following table:

TIEDOWN STRAP INFORMATION - EXAMPLE				
STRAP	RESTRAINT DIRECTION	LOAD FACTOR[a]	FLOOR ANGLE	CENTERLINE ANGLE
A	Forward	1.20	30°	5°
B	Aft	0.75	30°	5°
C	Up	1.80	65°	n/a
D	Side	0.75	20°	85°
E	Side	0.75	20°	85°
F	Up	1.80	65°	n/a

[a] From the table in the “Tiedown Requirements” section on page 2 of this subject.

Forward Restraint

The number of tiedowns required for restraint in the forward direction is calculated using the calculation procedure described on page 4, along with the strap information from the above Tiedown Strap Information table.

1. Calculation of the applied load in the forward direction (strap A):

$$L = LF \times W = 1.2 \times 3000 \text{ LB } (1361 \text{ KG}) = 3600 \text{ LB } (1633 \text{ KG})$$

APPLICABLE CONFIGURATIONS
All

-BOEING PROPRIETARY-

CARGO TIEDOWNS - LOWER DECK (Continued)

2. Calculation of the allowable fitting load (using strap A floor angle):

$$2000 \text{ LB } (907 \text{ KG}) + \left(1000 \text{ LB } (453 \text{ KG}) \times \frac{30°}{45°}\right) = 2666 \text{ LB } (1209 \text{ KG})$$

NOTE Ensure that the allowable fitting load is less than the allowable strap rating.

3. Calculation of the allowable forward load component (using the floor and centerline angles for strap A and the equation for the forward load component on page 4):

$$2666 \text{ LB } (1209 \text{ KG}) \times [\cos(30°) \times \cos(5°)] = 2300 \text{ LB } (1043 \text{ KG})$$

4. Calculation of the number of straps required for forward restraint:

$$\text{Number of Tiedown Straps} = \frac{3600 \text{ LB } (1633 \text{ KG})}{2 \times 2300 \text{ LB } (1043 \text{ KG})} = 0.78 \Rightarrow 1 \text{ Strap}$$

Thus, the one strap is sufficient to restrain the cargo in the forward direction.

Aft Restraint

The number of tiedowns required for restraint in the aft direction is calculated using the calculation procedure described on page 4, along with the strap information from the Tiedown Strap Information table on page 6.

1. Calculation of the applied load in the aft direction (strap B):

$$L = LF \times W = 0.75 \times 3000 \text{ LB } (1361 \text{ KG}) = 2250 \text{ LB } (1021 \text{ KG})$$

2. Calculation of the allowable fitting load (using strap B floor angle):

$$2000 \text{ LB } (907 \text{ KG}) + \left(1000 \text{ LB } (453 \text{ KG}) \times \frac{30°}{45°}\right) = 2666 \text{ LB } (1209 \text{ KG})$$

NOTE Ensure that the allowable fitting load is less than the allowable strap rating.

3. Calculation of the allowable aft load component (using the floor and centerline angles for strap B and the equation for the aft load component on page 4):

$$2666 \text{ LB } (1209 \text{ KG}) \times [\cos(30°) \times \cos(5°)] = 2300 \text{ LB } (1043 \text{ KG})$$

4. Calculation of the number of straps required for aft restraint:

$$\text{Number of Tiedown Straps} = \frac{2250 \text{ LB } (1021 \text{ KG})}{2 \times 2300 \text{ LB } (1043 \text{ KG})} = 0.49 \Rightarrow 1 \text{ Strap}$$

Thus, the one strap is sufficient to restrain the cargo in the aft direction.

-BOEING PROPRIETARY-

CARGO TIEDOWNS - LOWER DECK (Continued)

Side Restraint

The number of tiedowns required for restraint in the side direction is calculated using the calculation procedure described on page 4, along with the strap information from the Tiedown Strap Information table on page 6. Since the Load Factor, Floor Angle, and Centerline Angle are equivalent for straps D and E, the following calculations apply to both side directions.

1. Calculation of the applied load in the side direction (straps D and E):

$$L = LF \times W = 0.75 \times 3000 \text{ LB (1361 KG)} = 2250 \text{ LB (1021 KG)}$$

2. Calculation of the allowable fitting load (using the strap D and E floor angles):

$$2000 \text{ LB (907 KG)} + \left(1000 \text{ LB (453 KG)} \times \frac{20°}{45°}\right) = 2444 \text{ LB (1108 KG)}$$

NOTE Ensure that the allowable fitting load is less than the allowable strap rating.

3. Calculation of the allowable side load component (using the floor and centerline angles for straps D and E and the equation for the side load component on page 4):

$$2444 \text{ LB (1108 KG)} \times [\cos(20°) \times \sin(85°)] = 2287 \text{ LB (1037 KG)}$$

4. Calculation of the number of straps required for side restraints:

$$\text{Number of Tiedown Straps} = \frac{2250 \text{ LB (1021 KG)}}{2 \times 2287 \text{ LB (1037 KG)}} = 0.49 \Rightarrow 1 \text{ Strap}$$

Thus, the one strap is sufficient to restrain the cargo in each side direction. Note that if the floor and centerline angles were not equivalent, each side direction would need to be calculated independently.

Up Restraint

The number of tiedowns required for restraint in the up direction is calculated using the calculation procedure described on page 4, along with the strap information from the Tiedown Strap Information table on page 6. If the Load Factor or Floor Angle were different for straps C and F, the following calculation would have to be determined separately and the more conservative value used. A minimum of two straps is required for restraint in the up direction.

1. Calculation of the applied load in the up direction (straps C and F):

$$L = LF \times W = 1.80 \times 3000 \text{ LB (1361 KG)} = 5400 \text{ LB (2450 KG)}$$

2. Calculation of the allowable fitting load (using the floor angle for straps C and F):

$$3000 \text{ LB (1360 KG)} + \left(1000 \text{ LB (453 KG)} \times \frac{65°}{90°}\right) = 3722 \text{ LB (1687 KG)}$$

NOTE Ensure that the allowable fitting load is less than the allowable strap rating.

APPLICABLE CONFIGURATIONS
All

-BOEING PROPRIETARY-

CARGO TIEDOWNS - LOWER DECK (Continued)

3. Calculation of the allowable up load component (using the floor angle for straps C and F and the equation for the up load component on page 4):

$$3722 \text{ LB } (1687 \text{ KG}) \times \sin(65°) = 3373 \text{ LB } (1528 \text{ KG})$$

4. Calculation of the number of straps required for up restraint:

$$\text{Number of Tiedown Straps} = \frac{5400 \text{ LB } (2450 \text{ KG})}{2 \times 3373 \text{ LB } (1528 \text{ KG})} = 0.80 \Rightarrow 1 \text{ Strap} \Rightarrow 2 \text{ Straps}$$

A minimum of two straps is required for restraint in the up direction.

Conclusion

The tiedown configuration illustrated in the figure on page 6 is satisfactory for the restraint of a 3000 LB (1361 KG) package in the forward hold.

-BOEING PROPRIETARY-

TIEDOWN FITTING LOCATIONS - FORWARD COMPARTMENTS

FITTING LOCATIONS

The following illustration shows the layout of tiedown fittings in the forward compartment.

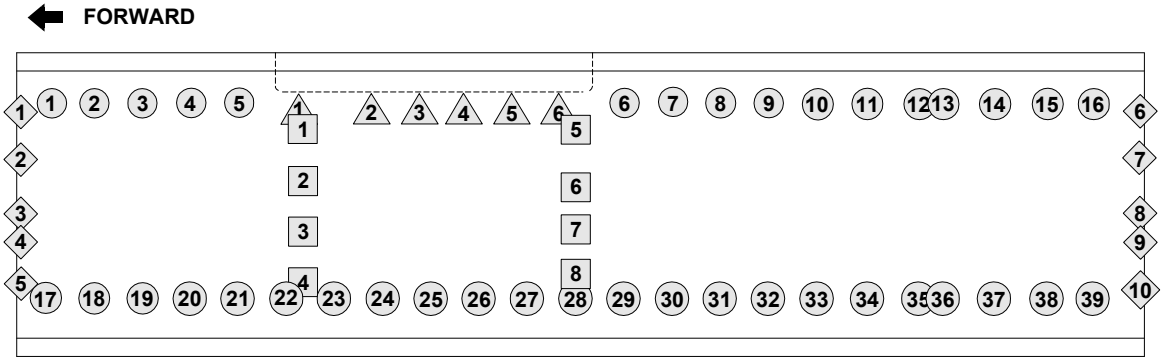

The following tables provide the locations for each tiedown fitting in the forward compartment.

○	NO.	B.A. IN.	B.B.L. IN.	W.L. IN.
Side Guide	1	247.0	+50.6	129.4
	2	269.0	+50.6	129.4
	3	291.0	+50.6	129.4
	4	313.0	+50.6	129.4
	5	335.0	+50.6	129.4
	6	511.0	+50.6	129.4
	7	533.0	+50.6	129.4
	8	555.0	+50.6	129.4
	9	577.0	+50.6	129.4
	10	599.0	+50.6	129.4
	11	621.0	+50.6	129.4
	12	643.0	+50.6	129.4
	13	654.0	+50.6	129.4
	14	676.0	+50.6	129.4
	15	698.0	+50.6	129.4
	16	720.0	+50.6	129.4
	17	247.0	-50.6	129.4
	18	269.0	-50.6	129.4
	19	291.0	-50.6	129.4
	20	313.0	-50.6	129.4
	21	335.0	-50.6	129.4
	22	357.0	-50.6	129.4
	23	379.0	-50.6	129.4
	24	401.0	-50.6	129.4
	25	423.0	-50.6	129.4

○	NO.	B.A. IN.	B.B.L. IN.	W.L. IN.
Side Guide (Continued)	26	445.0	-50.6	129.4
	27	467.0	-50.6	129.4
	28	489.0	-50.6	129.4
	29	511.0	-50.6	129.4
	30	533.0	-50.6	129.4
	31	555.0	-50.6	129.4
	32	577.0	-50.6	129.4
	33	599.0	-50.6	129.4
	34	621.0	-50.6	129.4
	35	643.0	-50.6	129.4
	36	654.0	-50.6	129.4
	37	676.0	-50.6	129.4
	38	698.0	-50.6	129.4
	39	720.0	-50.6	129.4

△	NO.	B.A. IN.	B.B.L. IN.	W.L. IN.
Sill Roller (Optional)	1	371.8	+48.8	125.2
	2	396.3	+48.8	125.2
	3	418.3	+48.8	125.2
	4	438.3	+48.8	125.2
	5	460.3	+48.8	125.2
	6	482.3	+48.8	125.2

◇	NO.	B.A. IN.	B.B.L. IN.	W.L. IN.
End Stop	1	235.8	+44.0	128.3
	2	235.8	+20.5	128.3
	3	235.8	-6.5	128.3
	4	235.8	-20.5	128.3
	5	235.8	-44.0	128.3
	6	738.7	+44.0	128.3
	7	738.7	+20.5	128.3
	8	738.7	-6.5	128.3
	9	738.7	-20.5	128.3
	10	738.7	-44.0	128.3

□	NO.	B.A. IN.	B.B.L. IN.	W.L. IN.
Pallet Lock	1	362.1	+35.5	127.0
	2	362.1	+9.1	127.0
	3	362.1	-16.2	127.0
	4	362.1	-41.2	127.0
	5	490.1	+35.0	128.1
	6	490.1	+6.5	128.1
	7	490.1	-14.5	128.1
	8	490.1	-36.8	128.1

APPLICABLE CONFIGURATIONS
All

-BOEING PROPRIETARY-

TIEDOWN FITTING LOCATIONS - AFT COMPARTMENTS

FITTING LOCATIONS

The following illustration shows the layout of tiedown fittings in the aft compartment.

AFT COMPARTMENT

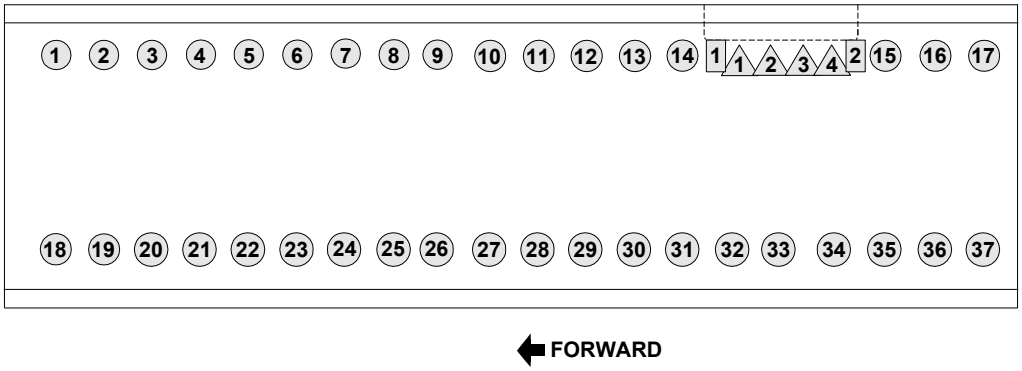

The following tables provide the locations for each tiedown fitting in the aft compartment.

○	NO.	B.A. IN.	B.B.L. IN.	W.L. IN.
Side Guide	1	1109.0	+50.6	129.4
	2	1131.0	+50.6	129.4
	3	1153.0	+50.6	129.4
	4	1175.0	+50.6	129.4
	5	1197.0	+50.6	129.4
	6	1219.0	+50.6	129.4
	7	1241.0	+50.6	129.4
	8	1263.0	+50.6	129.4
	9	1285.0	+50.6	129.4
	10	1307.0	+50.6	129.4
	11	1329.0	+50.6	129.4
	12	1351.0	+50.6	129.4
	13	1373.0	+50.6	129.4
	14	1395.0	+50.6	129.4
	15	1483.0	+50.6	129.4
	16	1505.0	+50.6	129.4
	17	1527.0	+50.6	129.4
	18	1109.0	-50.6	129.4
	19	1131.0	-50.6	129.4
	20	1153.0	-50.6	129.4
	21	1175.0	-50.6	129.4
	22	1197.0	-50.6	129.4

○	NO.	B.A. IN.	B.B.L. IN.	W.L. IN.
Side Guide (Continued)	23	1219.0	-50.6	129.4
	24	1241.0	-50.6	129.4
	25	1263.0	-50.6	129.4
	26	1285.0	-50.6	129.4
	27	1307.0	-50.6	129.4
	28	1329.0	-50.6	129.4
	29	1351.0	-50.6	129.4
	30	1373.0	-50.6	129.4
	31	1395.0	-50.6	129.4
	32	1417.0	-50.6	129.4
	33	1439.0	-50.6	129.4
	34	1461.0	-50.6	129.4
	35	1483.0	-50.6	129.4
	36	1505.0	-50.6	129.4
	37	1527.0	-50.6	129.4

△	NO.	B.A. IN.	B.B.L. IN.	W.L. IN.
Sill Roller (Optional)	1	1419.5	+46.4	124.4
	2	1433.4	+46.4	124.4
	3	1448.0	+46.4	124.4
	4	1460.1	+46.4	124.4

▢	NO.	B.A. IN.	B.B.L. IN.	W.L. IN.
Side Guide Roller (Optional)	1	1408.2	+48.1	127.1
	2	1471.8	+48.1	127.1

APPLICABLE CONFIGURATIONS
All

-BOEING PROPRIETARY-

TIEDOWN FITTING LOCATIONS - BULK COMPARTMENT

FITTING LOCATIONS

The following illustration shows the layout of tiedown fittings in the bulk compartment.

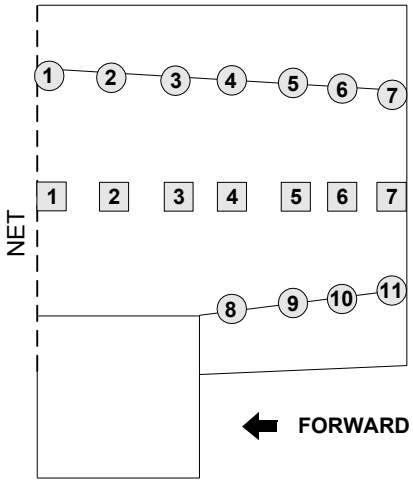

The following tables provide the locations for each tiedown fitting in the bulk compartment.

○	NO.	B.A. IN.	B.B.L. IN.	W.L. IN.
Side Tiedowns	1	1548.4	+43.0	127.2
	2	1570.4	+41.1	129.1
	3	1592.4	+41.6	132.3
	4	1611.4	+40.7	134.9
	5	1633.4	+39.1	137.3
	6	1649.4	+38.1	140.4
	7	1671.4	+34.6	143.4
	8	1611.4	-40.0	134.0
	9	1633.4	-38.0	137.0
	10	1649.4	-36.0	140.0
	11	1671.4	-33.0	142.0

□	NO.	B.A. IN.	B.B.L. IN.	W.L. IN.
Center Tiedowns	1	1549.0	-1.1	126.0
	2	1571.0	-1.1	128.9
	3	1593.0	-1.1	132.0
	4	1612.0	-1.1	134.0
	5	1634.0	-1.1	137.0
	6	1650.0	-1.1	140.0
	7	1669.4	-1.1	142.0

APPLICABLE CONFIGURATIONS
All

-BOEING PROPRIETARY-

CARGO LATERAL IMBALANCE CONTROL

PROCEDURE FOR CALCULATION OF IMBALANCE

Procedures in this section show how to increase the allowable airplane Taxi Weight by controlling the cargo lateral imbalance.

Occurrence

Cargo lateral imbalance occurs when the Center of Gravity of the cargo loaded is offset to the right or left of the airplane centerline. Note that this condition does not affect the longitudinal Center of Gravity which is measured as a percent of Mean Aerodynamic Chord (MAC).

Measurement

Cargo lateral imbalance is measured by the cargo lateral imbalance moment (CLIM) of the total cargo load. It is the responsibility of the operator to determine the cargo lateral imbalance moment. CLIM is determined as follows:

1. Determine the actual body buttock line (B.B.L.) for each loaded ULD based on the operator's loading practices. The actual B.B.L. must be within the allowable B.B.L. shown in the following table for the type of ULD loaded. Actual buttock lines to the left of the airplane centerline are negative and buttock lines to the right of the airplane centerline are positive.
2. Calculate the CLIM for each ULD using the following equation:

$$\text{CLIM} = \text{Cargo Weight in Pounds (Kilograms)} \times \text{Actual B.B.L. in Inches}$$

3. Calculate the NET CLIM by summing the CLIM for each ULD:

$$\text{NET CLIM} = \sum \text{CLIM (for each ULD)}$$

4. Determine the allowable taxi weight using the calculated NET CLIM and the procedures outlined in CHP-SEC 1-69-02x.

APPLICABLE CONFIGURATIONS
B, C, D, E, F, G, H

-BOEING PROPRIETARY-

CARGO LATERAL IMBALANCE CONTROL (Continued)

Allowable B.B.L.'s for cargo loaded into unit load devices are shown in the following table.

UNIT LOAD DEVICE LATERAL CENTER OF GRAVITY RANGE					
SIZE CODE	COMMON NAME	ORIENTATION REAR VIEW	ALLOWABLE LATERAL C.G.		
			LEFTMOST B.B.L. - IN.	NOMINAL B.B.L. - IN.	RIGHTMOST B.B.L. - IN.
A	P1 LD-7 LD-9	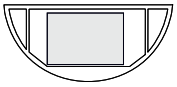	-12.8	-4.0	+4.8
K	LD-1	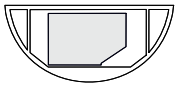	-23.4	-17.2	-11.0
	LD-3	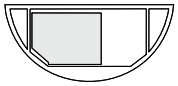	-23.4	-17.2	-11.0
		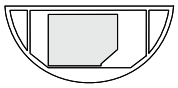	-23.4	-17.2	-11.0
L	LD-5 LD-10 LD-11	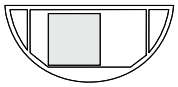	-23.2	-17.2	-11.2
	Half Pallet	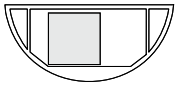	-23.2	-17.2	-11.2
M	P6	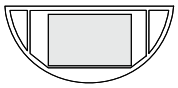	-9.6	0.0	+9.6
P	LD-2	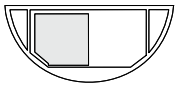	-28.8	-24.1	-19.4
		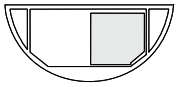	+19.4	+24.1	+28.8
Q	LD-4	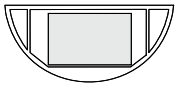	-9.6	0.0	+9.6
	LD-8	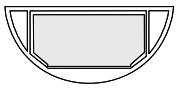	-9.6	0.0	+9.6

CAUTION THE ADDITIONAL CENTER OF GRAVITY ENVELOPE RESTRICTIONS PROVIDED IN CHP-SEC 1-63-0xx MUST BE OBSERVED FOR ALL UNIT LOAD DEVICES.

APPLICABLE CONFIGURATIONS
B, C, D, E, F, G, H

-BOEING PROPRIETARY-

CARGO LATERAL IMBALANCE CONTROL (Continued)

Operator Convenience

The following unit load devices may be assumed to have zero CLIM provided they are uniformly loaded about their base, since they are symmetrical about the airplane centerline.

- LD-4's
- LD-8's
- P6's

The following combined pairs of unit load devices may be assumed to have zero CLIM, provided each of the paired ULDs is uniformly loaded about its base and the weight between the left and right ULDs is evenly distributed, since for these conditions the calculated net cargo lateral imbalance moment for the pair is zero.

- LD-2's

Cargo and baggage in the aft bulk cargo compartment may be assumed to have zero CLIM if uniformly loaded.

Sample Problem 1

Eleven LD-3's are loaded on the left side of the airplane to a weight of 2000 LB (907.2 KG) each. The other unit load devices are assumed to be symmetrical about the centerline of the airplane. The lateral center of gravity for each ULD loaded is at B.B.L. = -17.2 inches. Thus, the cargo lateral imbalance moment equals:

$$\text{NET CLIM} = (11\ \text{LD-3s}) \times (2000\ \text{LB}) \times (-17.2\ \text{IN.}) = -378400\ \text{LB-IN.}$$

$$\text{NET CLIM} = (11\ \text{LD-3s}) \times (907.2\ \text{KG}) \times (-17.2\ \text{IN.}) = -171642\ \text{KG-IN.}$$

Therefore, using the guidelines provided in CHP-SEC 1-69-02x, the NET CLIM of -378400 IN-LB (-171642 KG-IN.), a reduction in the taxi weight is required.

Sample Problem 2

Three LD-3's are loaded on the left side of the airplane to a weight of 2000 LB (907.2 KG) each. The other unit load devices are assumed to be symmetrical about the centerline of the airplane. The lateral center of gravity for each ULD loaded is at B.B.L. = -17.2 inches. Thus, the cargo lateral imbalance moment equals:

$$\text{NET CLIM} = (3\ \text{LD-3s}) \times (2000\ \text{LB}) \times (-17.2\ \text{IN.}) = -103200\ \text{LB-IN.}$$

$$\text{NET CLIM} = (3\ \text{LD-3s}) \times (907.2\ \text{KG}) \times (-17.2\ \text{IN.}) = -46812\ \text{KG-IN.}$$

Therefore, using the guidelines provided in CHP-SEC 1-69-02x, the NET CLIM of -103200 IN-LB (-46812 KG-IN.), no reduction in the taxi weight is required.

-BOEING PROPRIETARY-

CARGO LATERAL IMBALANCE LIMITATIONS

CARGO LATERAL IMBALANCE MOMENT VERSUS GROSS WEIGHT LIMITATIONS

The following chart shows the allowable taxi weight with cargo lateral imbalance moment (CLIM). See CHP-SEC 1-69-00x for example calculation of CLIM. For intermediate values, use straight line interpolation.

Cargo Lateral Imbalance Moment (Gross Weight in LB)

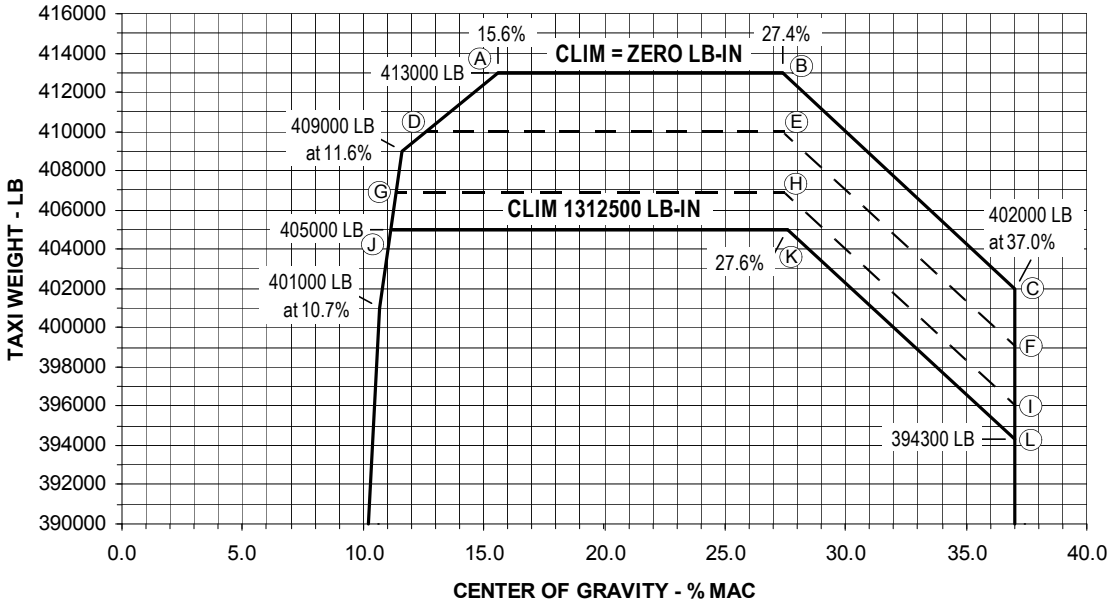

Data points defining lines of constant CLIM are provided in the following table. Intermediate values may be determined by using linear interpolation.

CLIM	POINTS	WEIGHT	C.G.
0	A	413000	15.6
	B	413000	27.4
	C	402000	37.0
500000	D	409953	12.6
	E	409953	27.5
	F	399067	37.0
1000000	G	406905	11.4
	H	406905	27.6
	I	396134	37.0
1312500	J	405000	11.2
	K	405000	27.6
	L	394300	37.0

NOTE An additional Cargo Lateral Imbalance Moment (CLIM) of 130000 LB-IN. is allowed when loading cargo on the left side of the airplane centerline.

APPLICABLE CONFIGURATIONS
B, C, D, E, F, G, H

-BOEING PROPRIETARY-

CARGO LATERAL IMBALANCE LIMITATIONS (Continued)

Cargo Lateral Imbalance Moment (Gross Weight in KG)

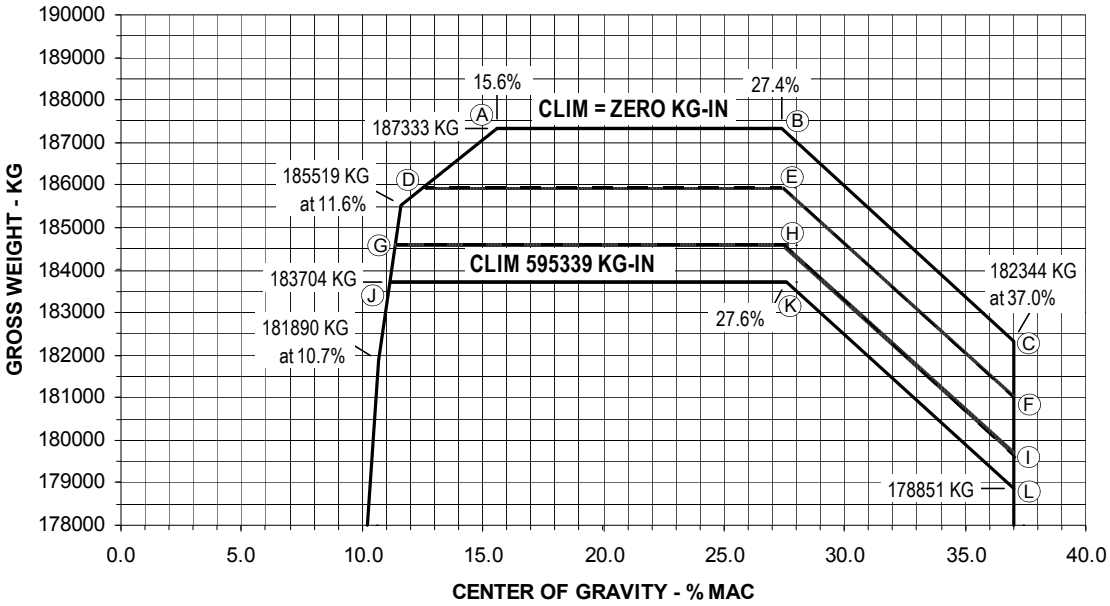

Data points defining lines of constant CLIM are provided in the following table. Intermediate values may be determined by using linear interpolation.

CLIM	POINTS	WEIGHT	C.G.
0	A	187333	15.6
	B	187333	27.4
	C	182344	37.0
226796	D	185952	12.6
	E	185952	27.5
	F	181014	37.0
453592	G	184569	11.4
	H	184569	27.6
	I	179683	37.0
595339	J	183704	11.2
	K	183704	27.6
	L	178851	37.0

NOTE An additional Cargo Lateral Imbalance Moment (CLIM) of 58967 KG-IN. is allowed when loading cargo on the left side of the airplane centerline.

APPLICABLE CONFIGURATIONS
B, C, D, E, F, G, H

-BOEING PROPRIETARY-

AIRPLANE JACKING

JACK POINT LOCATIONS

The following figure provides jack point locations.

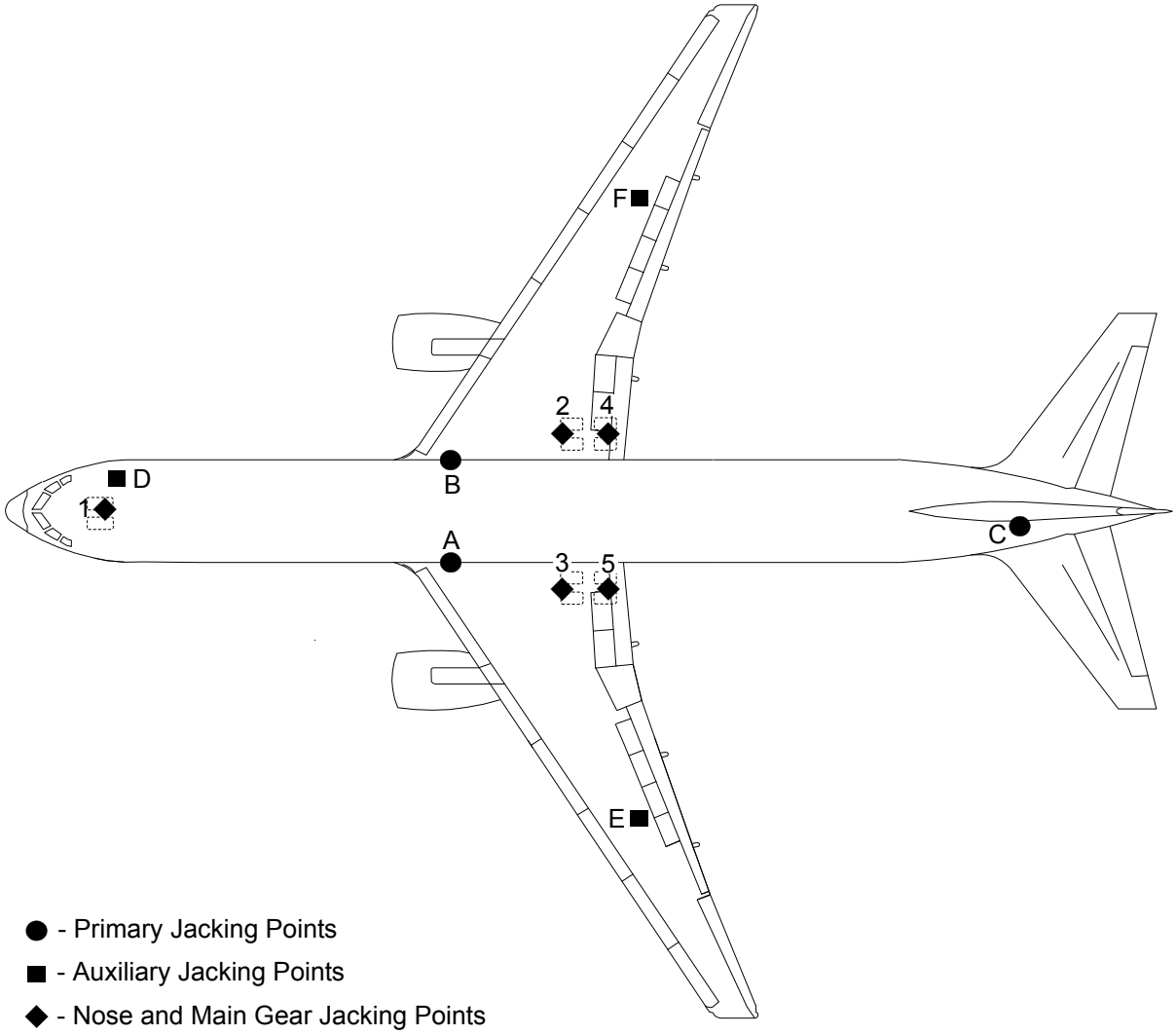

APPLICABLE CONFIGURATIONS
All

-BOEING PROPRIETARY-

AIRPLANE JACKING (Continued)

MAXIMUM ALLOWABLE JACKING LOADS

The following allowable jacking loads and envelopes are based on the structural limits of the airplane.

JACK POINT		MAXIMUM JACKING LOADS		LOCATION		
		LB	KG	B.A. IN.	B.B.L[a] IN.	W.L. IN.
Primary	A	150000	68038	784.5	-97.4	136.8
	B	150000	68038	784.5	+97.4	136.8
	C	67000	30390	1857.3	-35.9	181.4
Auxiliary	D	28000	12700	166.0	+73.0	145.5
	E	21000	9525	1157.0	-530.5	202.0
	F	21000	9525	1157.0	+530.5	202.0
Nose Gear[b]	1	50000	22679	150.5	0.0	Varies
Main Gear[b][c]	2	105000	47627	1018.5	+183.0	Varies
	3	105000	47627	1018.5	-183.0	Varies
	4	105000	47627	1074.5	+183.0	Varies
	5	105000	47627	1074.5	-183.0	Varies

[a] Negative values represent jack points on the left hand side of the airplane and positive values represent jack points on the right hand side of the airplane.
[b] For landing gear jacking, operations limited to 35 knot winds for a single jack and 25 knot winds for two or more jacks.
[c] Jack point balance arms are for gears in the static taxi position. Main gear jack points will vary with different oleo extensions.

CAUTION WHEN RAISING OR LOWERING AIRPLANE, ONLY THE THREE PRIMARY JACK POINTS A, B, & C SHALL BE USED. FOR MAINTENANCE, RECOVERY AND HEAVY WEATHER OPERATIONS, WHERE STABILIZATION IS REQUIRED, AUXILIARY POINTS D, E, & F SHALL BE ENGAGED ONLY AFTER PRIMARY JACKS ARE SECURED IN FINAL POSITION. LOADS AT AUXILIARY POINTS SHALL NOT EXCEED VALUES SPECIFIED IN TABLE.

WARNING WHEN JACKING ON MAIN GEAR JACKING POINTS, THERE MUST BE A MINIMUM OF ONE INCH OF OLEO EXTENSION.

APPLICABLE CONFIGURATIONS
All

-BOEING PROPRIETARY-

AIRPLANE JACKING (Continued)

LIMITATIONS ENVELOPES

During the airplane raising and lowering operation the airplane must be within the weight and balance limits as shown. Refer to CHP-SEC 1-00-04x for conversion formulas between %MAC and Balance Arms.

Primary (A,B,C) Jack Points (Gross Weight in LB)

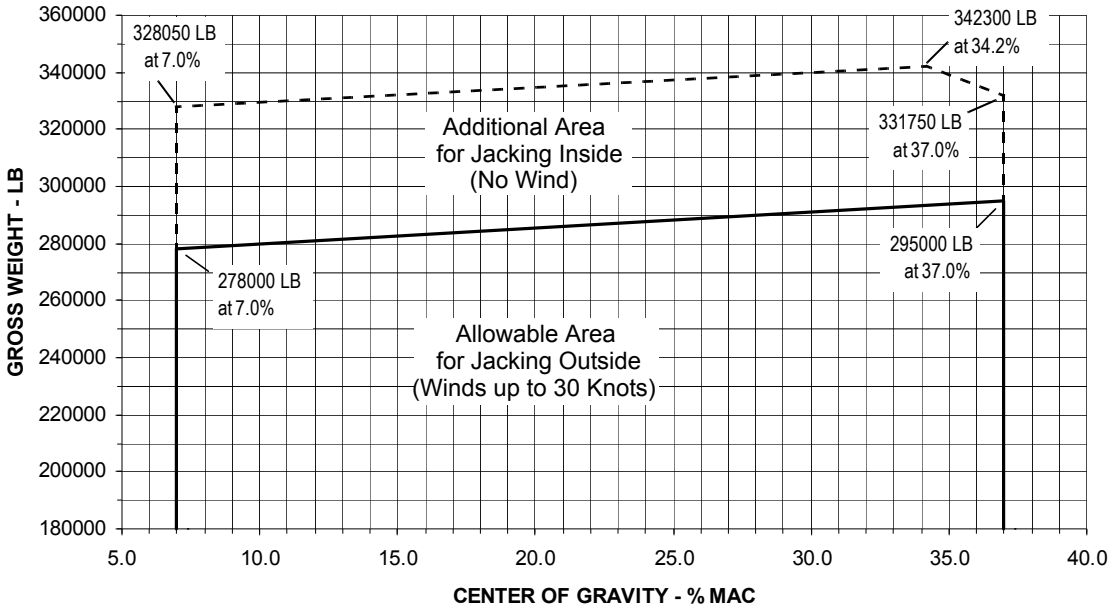

Primary (A,B,C) Jack Points (Gross Weight in KG)

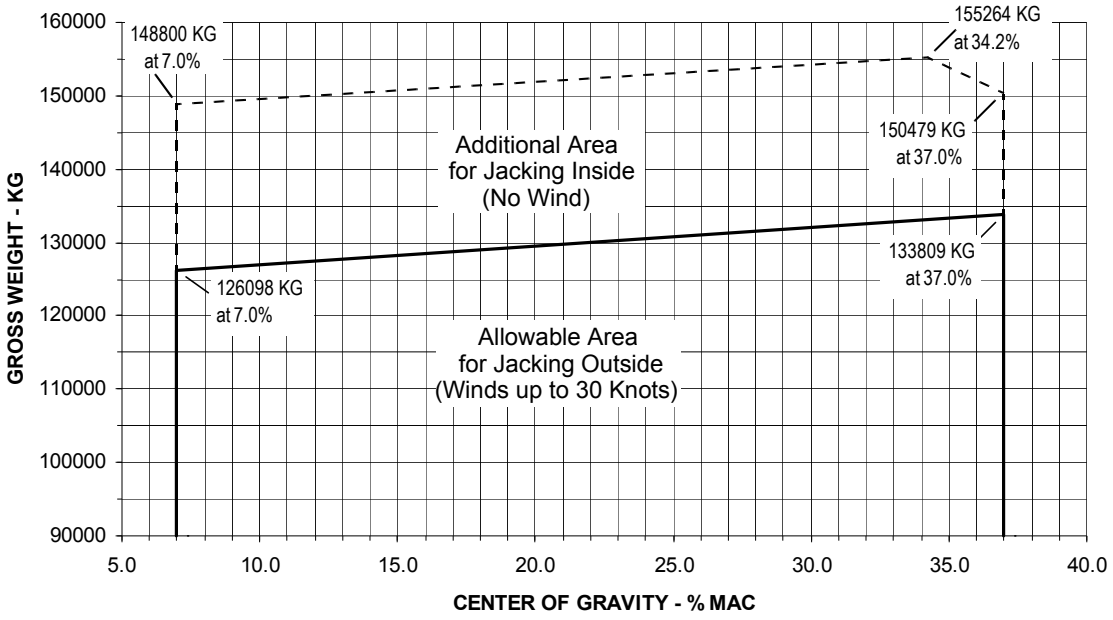

APPLICABLE CONFIGURATIONS
All

-BOEING PROPRIETARY-

AIRPLANE JACKING (Continued)

Main Gear (2,3,4,5) and Nose Gear (1) Jack Points (Gross Weight in LB)

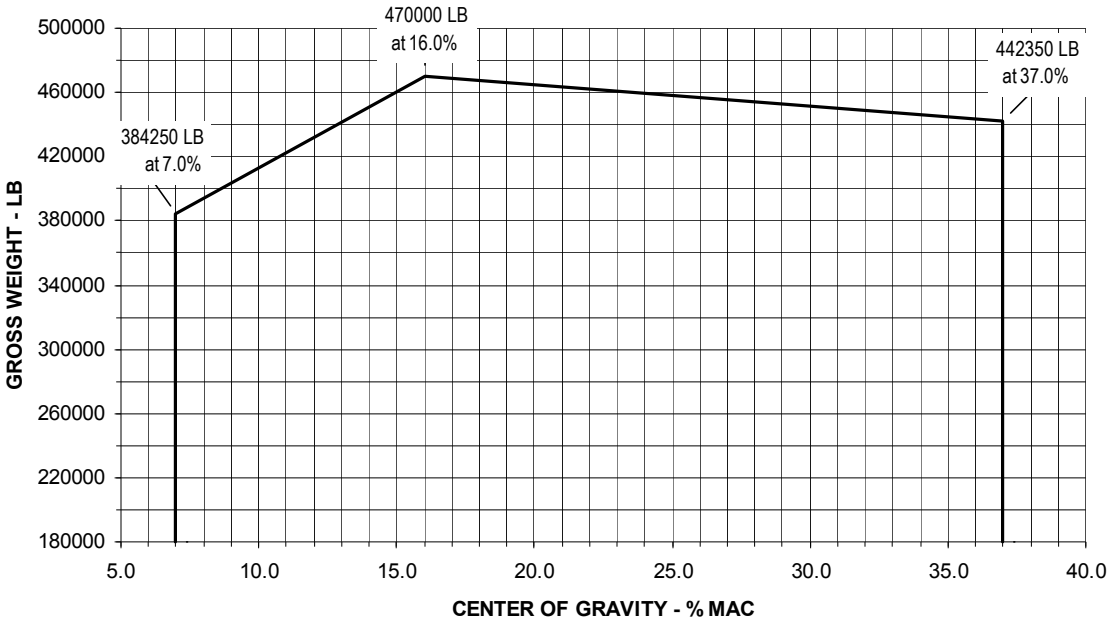

Main Gear (2,3,4,5) and Nose Gear (1) Jack Points (Gross Weight in KG)

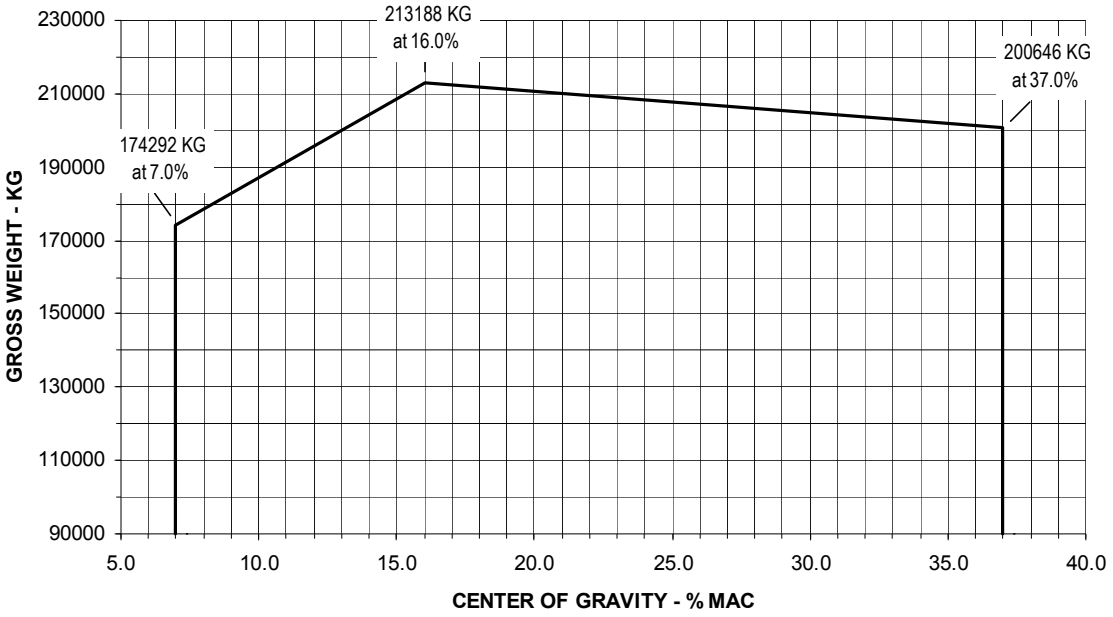

APPLICABLE CONFIGURATIONS
All

-BOEING PROPRIETARY-

AIRPLANE JACKING (Continued)

Forward Body (D) Jack Point (Gross Weight in LB)

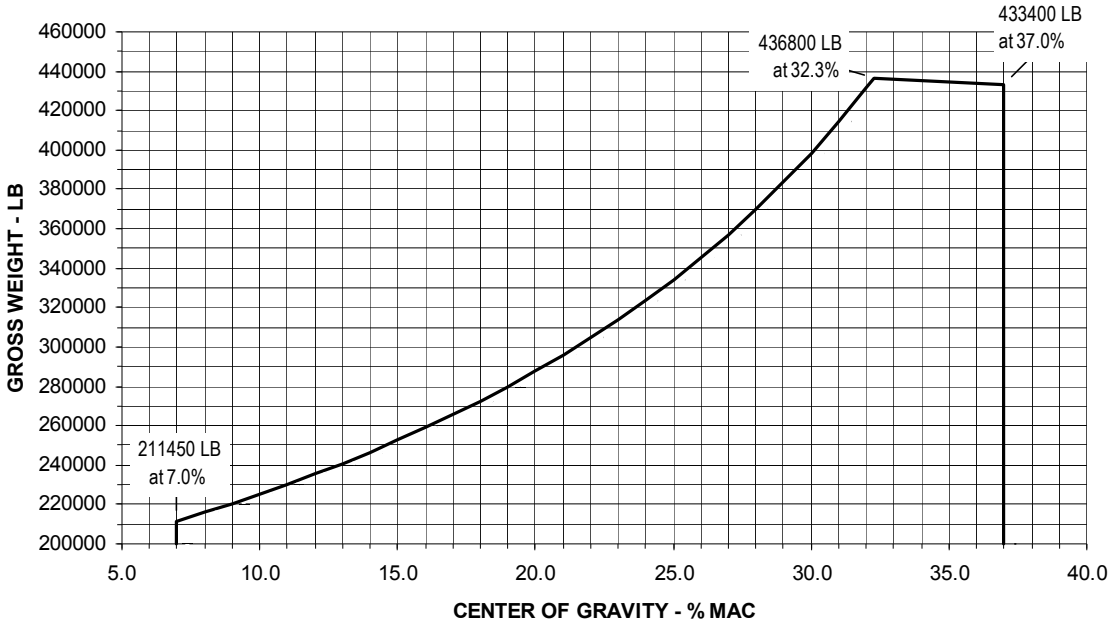

Forward Body (D) Jack Point (Gross Weight in KG)

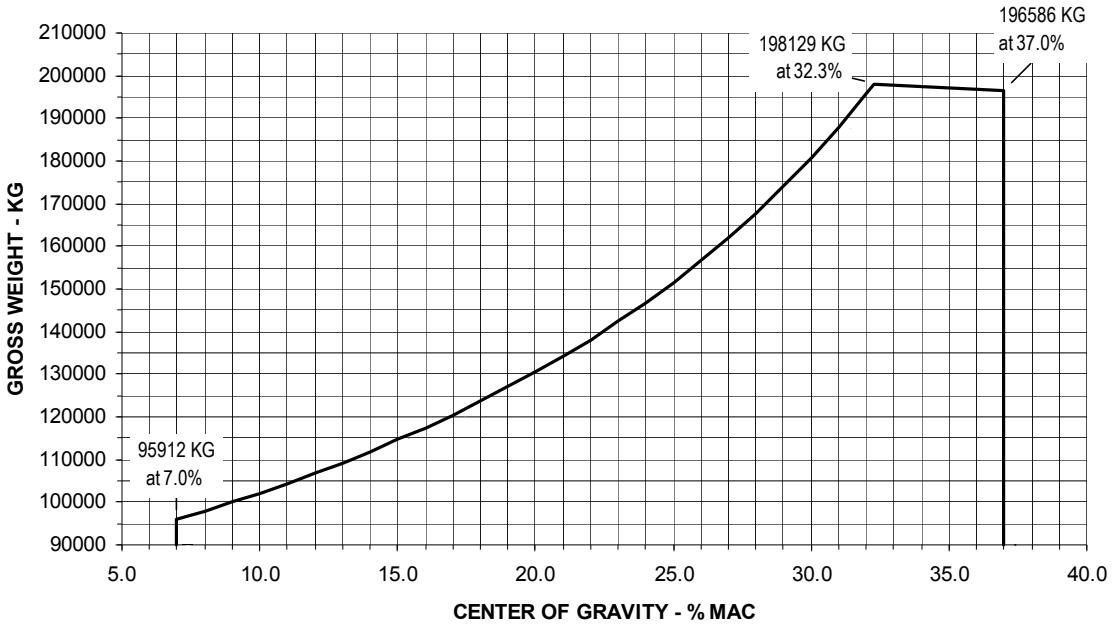

APPLICABLE CONFIGURATIONS
All

-BOEING PROPRIETARY-

MAIN LANDING GEAR JACK POINTS FOR VARIOUS OLEO EXTENSIONS

JACK POINT BALANCE ARMS VERSUS OLEO EXTENSION

The following main landing gear figure shows how to determine the amount of oleo extension (Dimension “A”). The corresponding chart diagrams the relationship between the main landing gear jack point balance arms and the main landing gear oleo extension (Dimension “A”).

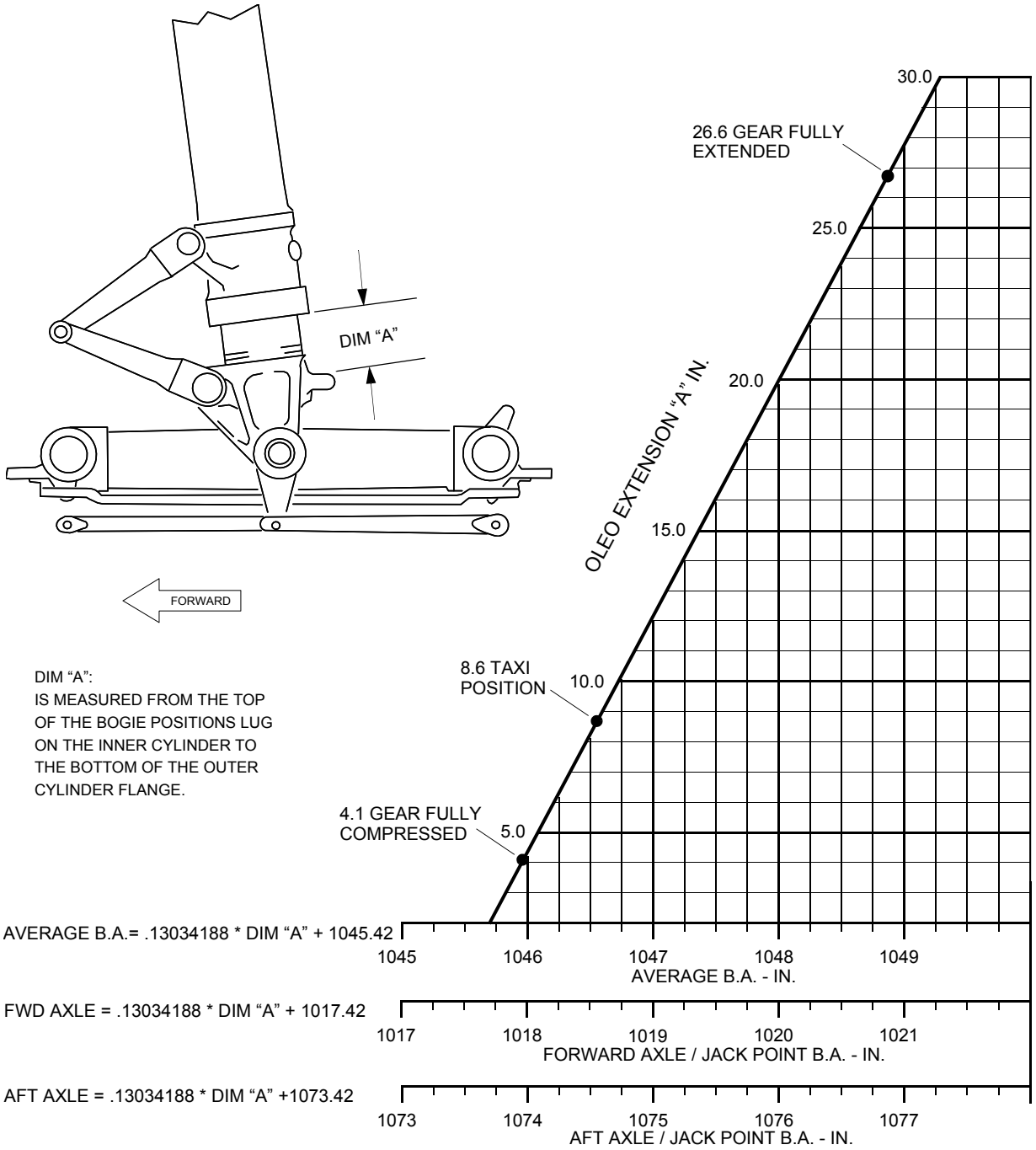

APPLICABLE CONFIGURATIONS
All

-BOEING PROPRIETARY-

AIRPLANE WEIGHING PROCEDURE

GENERAL INFORMATION

This section describes the recommended procedures for preparation and weighing of the model 767-300 airplane. Weighing facilities, weighing equipment and leveling provisions required for weighing the airplane are also discussed. Useful information concerning the procedures for establishing aircraft initial weight, fleet weights, re-establishing fleet weights, periodic weighing requirements, etc. may be found in FAA Advisory Circular 120-27E.

Airplane weighing may be accomplished by:

- The use of platform scales.
- The use of electronic load cells by jacking the airplane at the landing gear axle jack points.
- The use of electronic load cells by jacking the airplane at the primary jacking points.

CAUTION FOR SAFETY REASONS, WEIGHING THE AIRPLANE BY JACKING AT THE PRIMARY JACKING POINTS IS NOT RECOMMENDED, AND SHOULD ONLY BE USED WHEN OTHER PROCEDURES ARE NOT AVAILABLE.

WEIGHING FACILITIES AND EQUIPMENT

The airplane should be weighed in still air, preferably inside a closed facility that will:

- Exclude all wind and drafts.
- Permit shutdown of air conditioning during the weighing operation.
- Maintain a relatively constant temperature.
- Provide a level weighing surface and sufficient overhead clearance.

The required equipment for weighing an airplane consists of:

- Certified electronic or mechanical weighing equipment.
- Hydraulic jacks and adapters, if necessary.
- Landing gear oleo locks, if necessary.
- Plumb bob.

PREPARATION FOR AIRPLANE WEIGHING

The airplane configuration is of extreme importance in the derivation of a defined airplane operating weight from an actual scale weight. The interior and exterior of the airplane must be as complete as possible. All fluid levels (fuel, oil, water, hydraulic) must be known quantities. The weighing area and equipment usage must be controlled to avoid errors and minimize variation in scale readings.

Fuel

Fuel from all tanks is drained to the trapped (usable and unusable) fuel condition. Trapped fuel is defined as the quantity of fuel which cannot be removed through the production sump tank drains.

To obtain trapped fuel condition:

1. Pump off all usable fuel to sump level.

APPLICABLE CONFIGURATIONS
All

-BOEING PROPRIETARY-

AIRPLANE WEIGHING PROCEDURE (Continued)

2. Adjust and maintain airplane attitude at 0.0 degrees nose down (±0.1 degree) longitudinal and 0.0 degrees (±0.1 degree) lateral.
3. Drain the remaining fuel through sump drain valves.

System Fluids

System fluids must be drained or at a known quantity as follows:

- ❑ Drain all waste tanks.
- ❑ Drain potable water system.
- ❑ The following systems must be at a known quantity (serviced for flight is preferred):
  - ❑ Engine Oil
  - ❑ Hydraulic Fluids
  - ❑ Oxygen
  - ❑ Landing Gear Oleo Oil
  - ❑ Fire Extinguisher Charge
  - ❑ Miscellaneous Subsystem Fluids

Airplane Configuration

The condition of the airplane at the time of weighing must be one that is well defined and can be easily repeated. Each of the following steps must be completed prior to weighing:

- ❑ Inventory the airplane using an approved inventory list.
- ❑ Remove all shop equipment, tools, and trash.
- ❑ Stow all loose equipment items in their proper locations.
- ❑ Dry the airplane thoroughly.
- ❑ Close all doors and access panels.
- ❑ Extend or retract the flaps fully (refer to CHP-SEC 1-08-xxx of this document for gear and flap retraction moments).
- ❑ Set the horizontal stabilizer, control surfaces, and spoilers to their neutral positions.
- ❑ Inflate landing gear tires to specified operating pressures.

WEIGHING OPERATION

The airplane should be weighed in a level longitudinal attitude when possible. If the airplane cannot be leveled for weighing, the longitudinal attitude must be within ± 2 degrees from level during the actual weighing operation, and the measured center of gravity must be arithmetically corrected to an equivalent “level” center of gravity. This requires application of the correction factors from the table in the “Non-Level Weighing” section on page 5.

The recommended method of determining the longitudinal attitude of the aircraft is to attach a plumb bob to the plumb bob fitting located in the left main gear wheel well and to read the longitudinal attitude from the corresponding scale.

APPLICABLE CONFIGURATIONS
All

-BOEING PROPRIETARY-

AIRPLANE WEIGHING PROCEDURE (Continued)

When the airplane is being weighed on platform scales or the main landing gear jacking points, it is necessary to measure the main landing gear oleo extension since the balance arm of the weight reaction point varies with the extension of the oleo strut. (Refer to CHP-SEC 1-80-xxx of this document for further information.)

WEIGHING PROCEDURE USING PLATFORM SCALES

The following procedure outlines the method for weighing the airplane on portable or floor level platform scales. The scales may be mechanical beam or electronic. Follow weighing equipment manufacturer's operating instructions.

1. Zero the platform scales prior to putting the airplane on the scales. All undesirable tare should be off the scales.
2. Position the airplane on the scales. The approach should be straight and the airplane should be brought slowly and smoothly to a stop, without applying airplane brakes.
3. Inflate or deflate landing gear oleos as required to obtain the desired longitudinal attitude. Check the attitude with the plumb bob.
4. Record landing gear oleo extensions.
5. Record weight reading obtained from each airplane weight reaction point.
6. Remove the airplane from the scales.
7. Check the scales for zero load condition.
8. Repeat weighing procedure as needed to verify airplane weight.

WEIGHING PROCEDURE USING ELECTRONIC LOAD CELLS

The airplane can be weighed using individual electronic load cells with adapters to interface with ground support equipment jacks and airplane jack points. It is most important that the weighing kit be adequately warmed up and that the airplane, ground support equipment, and weighing cells attain the same even temperature prior to weighing the airplane. Load cells require care in placement to prevent side loads. When using jacks, it is imperative to remove all weighing cell misalignment due to uneven floors or airplane structural deflection.

The maximum jacking loads shown in CHP-SEC 1-80-xxx of this document must not be exceeded during jacking operations.

The following procedures outline the method for weighing the airplane with electronic load cells at either of the following:

- Landing gear axle jack points.
- Primary jacking points.

Landing Gear Axle Jack Points

Follow these procedures when weighing the airplane with electronic load cells at the landing gear axle jack points:

1. Follow weighing equipment manufacturer's operating instructions.

AIRPLANE WEIGHING PROCEDURE (Continued)

2. Inflate or deflate landing gear oleos as required to obtain the desired longitudinal attitude. Check the attitude with plumb bob.
3. Record landing gear oleo extensions.
4. Zero electronic weighing equipment prior to raising the airplane.
5. Center the jacks, with load cells installed, under the jack points. Proper alignment must be made between load cells and jack points.
6. Jack all positions at an even rate, maintaining a level attitude, until tires clear the floor.
7. Check airplane level attitude with the plumb bob. If necessary, jack individual points to obtain the desired attitude.
8. Record weight reading obtained from each airplane weight reaction point.
9. Lower airplane gently to the floor, maintaining a level attitude, until load cells are completely clear of the jack points.
10. Check the load cells for zero load condition.
11. Repeat weighing procedure as needed to verify airplane weight.

Primary Jacking Points

Follow these procedures when weighing the airplane with electronic load cells at the primary jacking points:

1. See CHP-SEC 1-80-xxx of this document for balance arms and load limits for primary jacking points.
2. Follow weighing equipment manufacturer's operating instructions.
3. Bleed all air from the nose and main landing gear oleos and install oleo uplocks to prevent the oleos from extending.

WARNING ALL AIR MUST BE REMOVED FROM THE LANDING GEAR OLEOS IF UPLOCKS ARE INSTALLED. IMPROPER OLEO DEFLATION MAY CAUSE OLEO UPLOCK FAILURE.

4. Level the airplane prior to jacking so the airplane may be raised and lowered evenly on jack points, and minimize side loads. If the airplane attitude is nose down prior to jacking, an optional method of leveling the airplane is to inflate the nose gear oleo. The nose gear oleo would then be allowed to fully extend during the jacking operation.
5. Secure the main landing gear trucks, if required, by rope to prevent rotation during the jacking operation.
6. Zero electronic weighing equipment prior to raising the airplane.
7. Center the jacks, with load cells installed under the jack points. Proper alignment must be made between load cells and jack points.
8. Jack all positions at an even rate, maintaining a level attitude, until tires clear the floor.
9. Check airplane level attitude with the plumb bob. If necessary, jack individual points to obtain the desired attitude.
10. Record weight reading obtained from each airplane weight reaction point.

APPLICABLE CONFIGURATIONS
All

-BOEING PROPRIETARY-

AIRPLANE WEIGHING PROCEDURE (Continued)

11. Lower airplane gently to the floor, maintaining a level attitude, until load cells are completely free of the airplane.
12. Check the load cells for zero load condition.
13. Repeat weighing procedure as needed to verify airplane weight.

NON-LEVEL WEIGHING

When the airplane is weighed in a non-level condition, the calculated C.G. must be corrected to the level condition. The attitude of the airplane must be known at the time of weighing. Determine the C.G. of the airplane in this non-level condition, and then use the following table to correct the C.G. to the level condition.

ANGLE DEGREES		C.G. CORRECTION IN.
Nose down	-2	4.9
	-1 7/8	4.6
	-1 3/4	4.3
	-1 5/8	4.0
	-1 1/2	3.7
	-1 3/8	3.4
	-1 1/4	3.1
	-1 1/8	2.7
	-1	2.4
	-7/8	2.1
	-3/4	1.8
	-5/8	1.5
	-1/2	1.2
	-3/8	0.9
	-1/4	0.6
	-1/8	0.3
Level	0	0.0

ANGLE DEGREES		C.G. CORRECTION IN.
Level	0	0.0
	1/8	-0.3
	1/4	-0.6
	3/8	-0.9
	1/2	-1.2
	5/8	-1.5
	3/4	-1.8
	7/8	-2.1
	1	-2.4
	1 1/8	-2.7
	1 1/4	-3.1
	1 3/8	-3.4
	1 1/2	-3.7
	1 5/8	-4.0
	1 3/4	-4.3
	1 7/8	-4.6
Tail down	2	-4.9

Non-Level Weighing Example

An airplane weighed in a 1-1/2 degree tail down attitude has a calculated, non-level C.G. at B.A. 984.4 IN. Applying the C.G. correction of -3.7 inches (from the table) gives the level attitude C.G. at 980.7 IN.

-BOEING PROPRIETARY-

TOWING AND TIPPING LIMITATIONS

TOWING AND TIPPING CONSIDERATIONS

Tipping is generally not a concern for 767-300 airplanes if good judgement is exercised in maintaining airplane stability during ground operations. Effects of towing and ground operations on the airplane center of gravity must be taken into account. The absolute tipping limit for the 767-300 airplane is at 56.0% MAC, considerably aft of the ground stability limit. Some of the major factors affecting the airplane tipping and stability limits will include, but are not limited to the following items:

- Airplane Empty Weight
- Airplane Attitude
- Fuel Loading
- Passenger Loading
- Cargo Loading
- Ramp Slope
- Runway Surface Condition
- Snow Loads
- Wind Loads

The ground stability limit takes into account the effects of the following:

- 3% Ramp slope
- Towing forces
- 35 knot headwind

By ensuring that the airplane center of gravity during towing is more forward than the ground stability limit, a tipping situation will be avoided.

NOTE See the Maintenance Manual for towing procedures and ground stability limits during maintenance.

TOWING AND TIPPING LIMITATIONS (Continued)

TOWING AND TIPPING LIMITS (ENGLISH)

The following diagram shows the towing and tipping limits in english units:

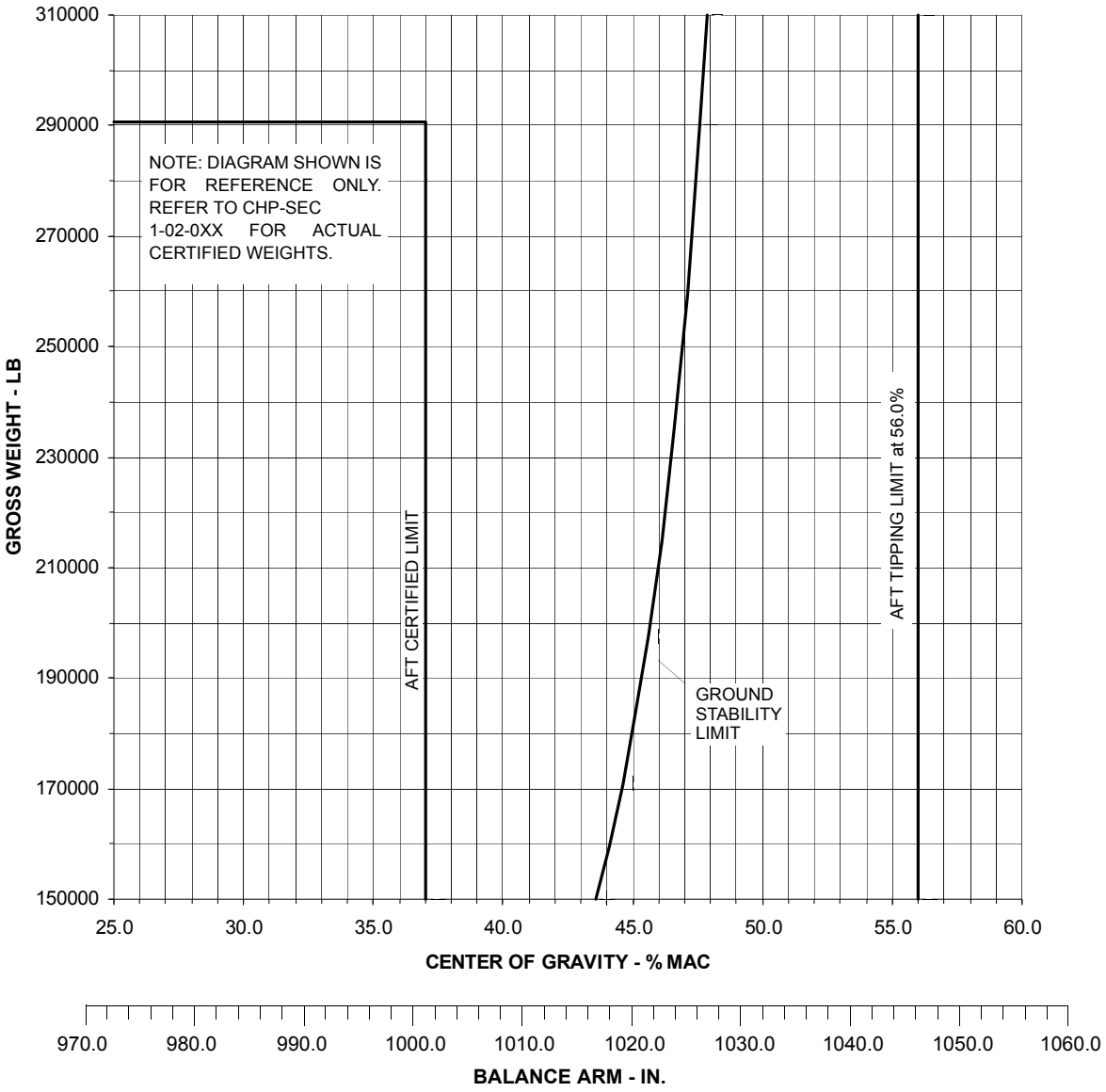

APPLICABLE CONFIGURATIONS
All

-BOEING PROPRIETARY-

TOWING AND TIPPING LIMITATIONS (Continued)

TOWING AND TIPPING LIMITS (METRIC)

The following diagram shows the towing and tipping limits in metric units:

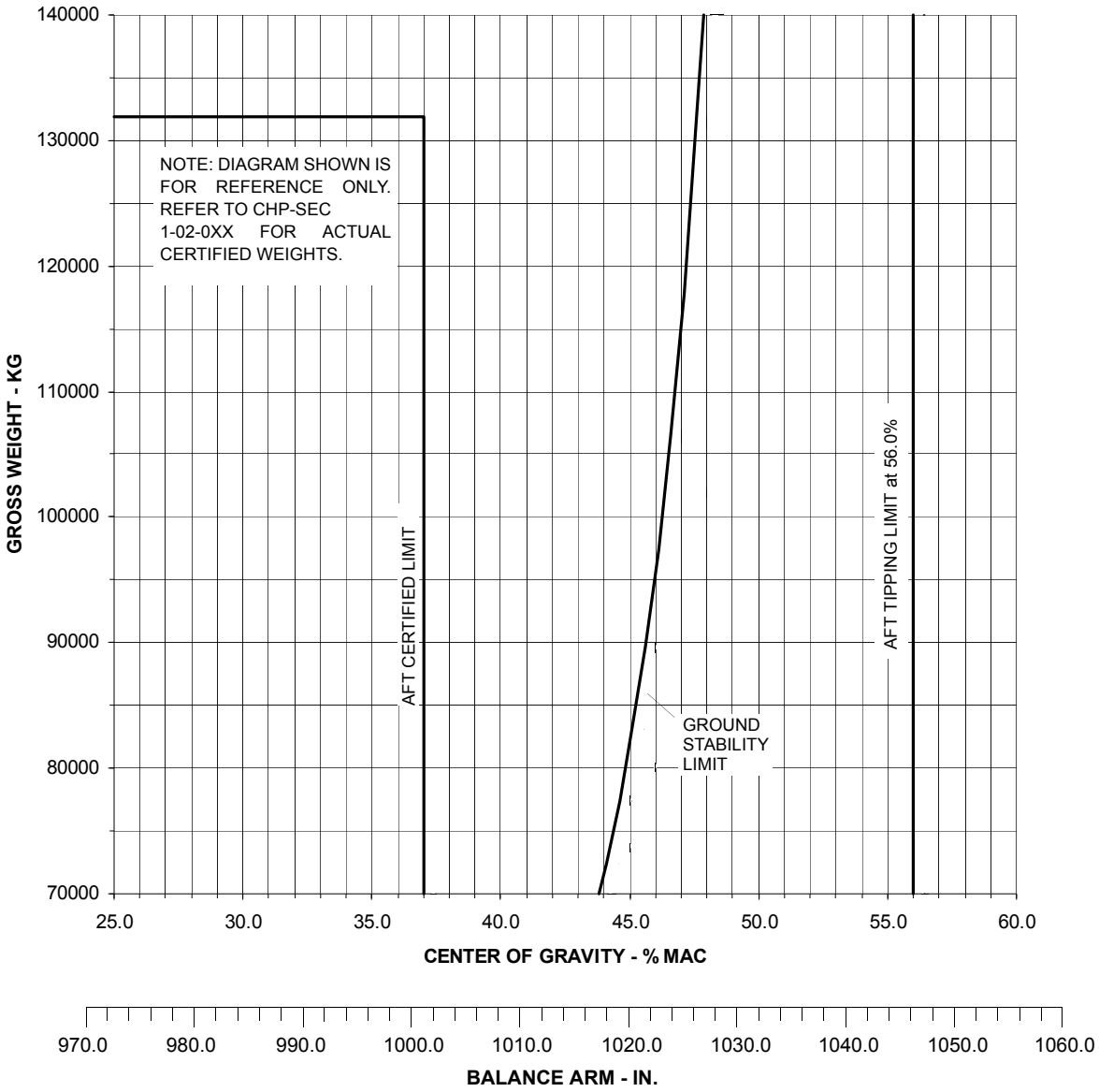

APPLICABLE CONFIGURATIONS
All

-BOEING PROPRIETARY-

COMPONENT WEIGHTS AND BALANCE ARMS

WING COMPONENTS

Some of the removable wing components are illustrated in the following figure:

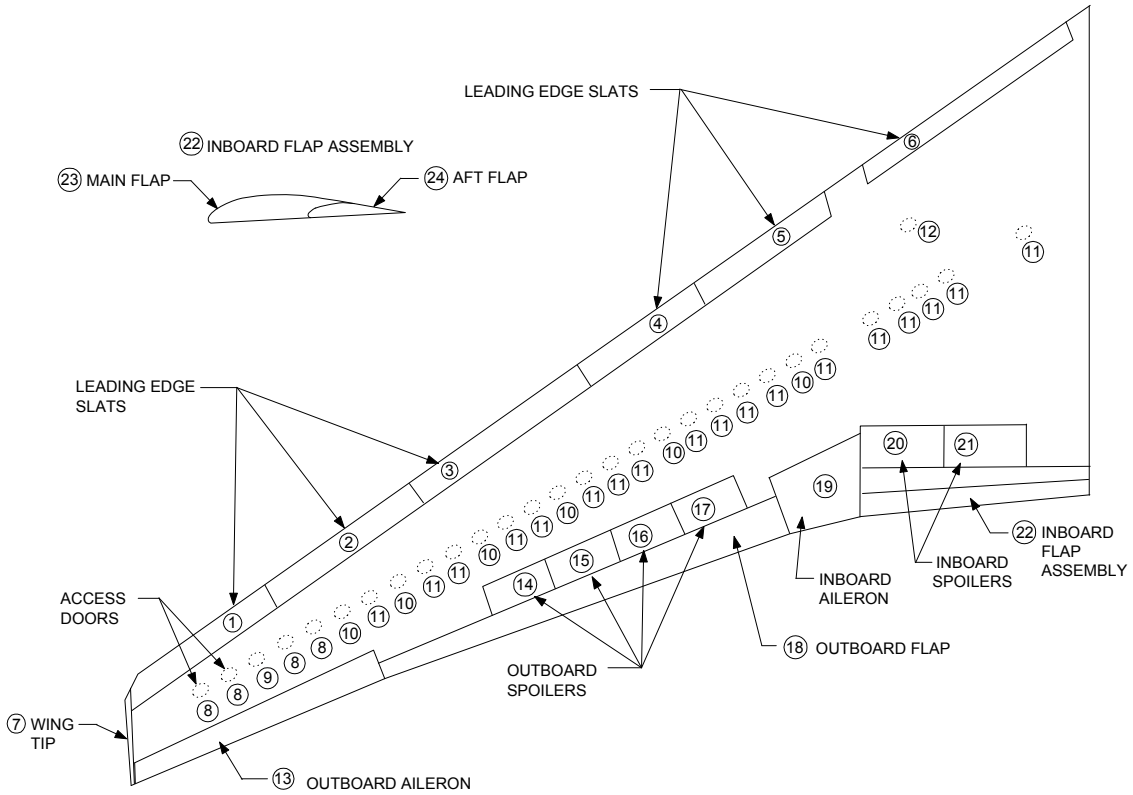

The following table provides nominal weights and balance arms for wing components from the above illustration. Values from this table should only be used to determine approximate weight and balance for specialized types of maintenance.

ITEM NO.	WING COMPONENTS	WEIGHT		B.A. IN.
		LB/EA	KG/EA	
1	Leading Edge Slat No. 1	88	40	1257
2	Leading Edge Slat No. 2	98	44	1175
3	Leading Edge Slat No. 3	103	47	1091
4	Leading Edge Slat No. 4	104	47	1006
5	Leading Edge Slat No. 5	101	46	926
6	Leading Edge Slat No. 6	143	65	803
7	Wing Tip	19	9	1339
8	Access Doors (4)	5	2	Varies
9	Pressure Relief Door	5	2	1298
10	Dripstick Access Doors (6)	5	2	Varies
11	Access Doors (18)	5	2	Varies
12	Dry Bay Access Door	5	2	940

APPLICABLE CONFIGURATIONS
All

-BOEING PROPRIETARY-

COMPONENT WEIGHTS AND BALANCE ARMS (Continued)

ITEM NO.	WING COMPONENTS (Continued)	WEIGHT		B.A. IN.
		LB/EA	KG/EA	
13	Outboard Aileron	124	56	1307
14	Outboard Spoiler No. 1	24	11	1202
15	Outboard Spoiler No. 2	24	11	1179
16	Outboard Spoiler No. 3	24	11	1156
17	Outboard Spoiler No. 4	24	11	1133
18	Outboard Flap	435	197	1193
19	Inboard Aileron	130	59	1109
20	Inboard Spoiler No. 5	40	18	1083
21	Inboard Spoiler No. 6	40	18	1078
22	Inboard Flap Assembly	(494)	(224)	(1093)
23	Inboard Main Flap	385	175	1085
24	Inboard Aft Flap	109	49	1120

APPLICABLE CONFIGURATIONS
All

-BOEING PROPRIETARY-

COMPONENT WEIGHTS AND BALANCE ARMS

HORIZONTAL STABILIZER COMPONENTS

Some of the removable horizontal stabilizer components are illustrated in the following figure:

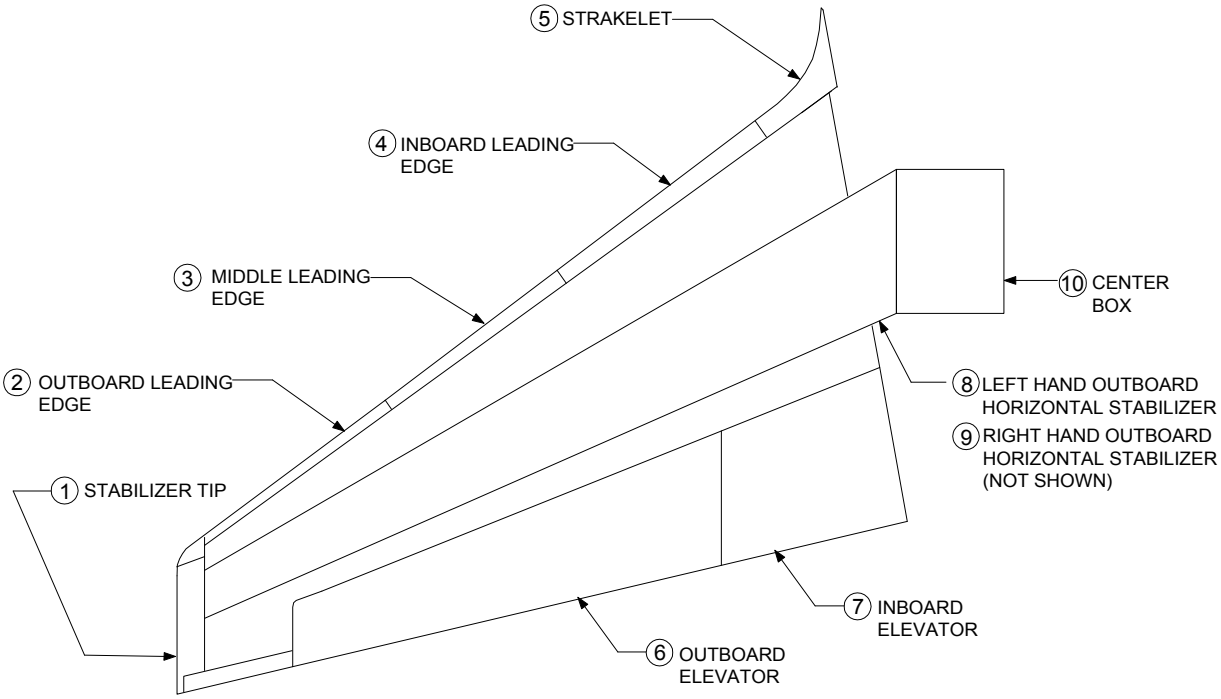

The following table provides nominal weights and balance arms for horizontal stabilizer components from the above illustration. Values from this table should only be used to determine approximate weight and balance for specialized types of maintenance.

ITEM NO.	HORIZONTAL STABILIZER COMPONENTS	WEIGHT		B.A. IN.
		LB/EA	KG/EA	
1	Stabilizer Tip	11	5	2070
2	Outer Leading Edge	13	6	2000
3	Middle Leading Edge	18	8	1937
4	Inboard Leading Edge	26	12	1871
5	Strakelet	16	7	1819
6	Outboard Elevator	182	83	2033
7	Inboard Elevator	85	39	1996
	Horizontal Stabilizer[a]	(4282)	(1942)	(1942)
8	Left Hand Outboard	1537	697	1958
9	Right Hand Outboard	1537	697	1958
10	Center Box	1208	548	1903

[a] This includes the total horizontal stabilizer installation less the other components listed in this table.

APPLICABLE CONFIGURATIONS
All

-BOEING PROPRIETARY-

COMPONENT WEIGHTS AND BALANCE ARMS

VERTICAL FIN COMPONENTS

Some of the removable vertical fin components are illustrated in the following figure:

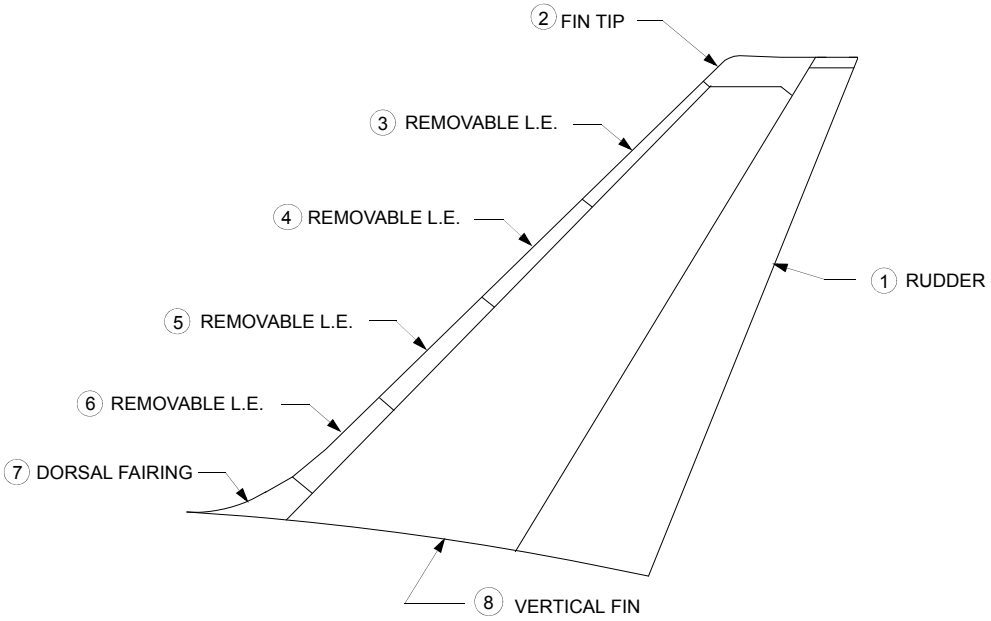

The following table provides nominal weights and balance arms for vertical fin components from the above illustration. Values from this table should only be used to determine approximate weight and balance for specialized types of maintenance.

ITEM NO.	VERTICAL FIN COMPONENTS	WEIGHT		B.A. IN.
		LB/EA	KG/EA	
1	Rudder	435	197	2004
2	Fin Tip	23	10	2074
3	Removable Leading Edge	19	9	1779
4	Removable Leading Edge	30	14	1825
5	Removable Leading Edge	33	15	1907
6	Removable Leading Edge	15	7	1981
7	Dorsal Fairing	45	20	1742
8	Vertical Fin[a]	2130	966	1907

[a] This includes the total fin installation less the other components listed in this table.

APPLICABLE CONFIGURATIONS
All

-BOEING PROPRIETARY-

COMPONENT WEIGHTS AND BALANCE ARMS

BODY COMPONENTS

Some of the removable body components are illustrated in the following figure:

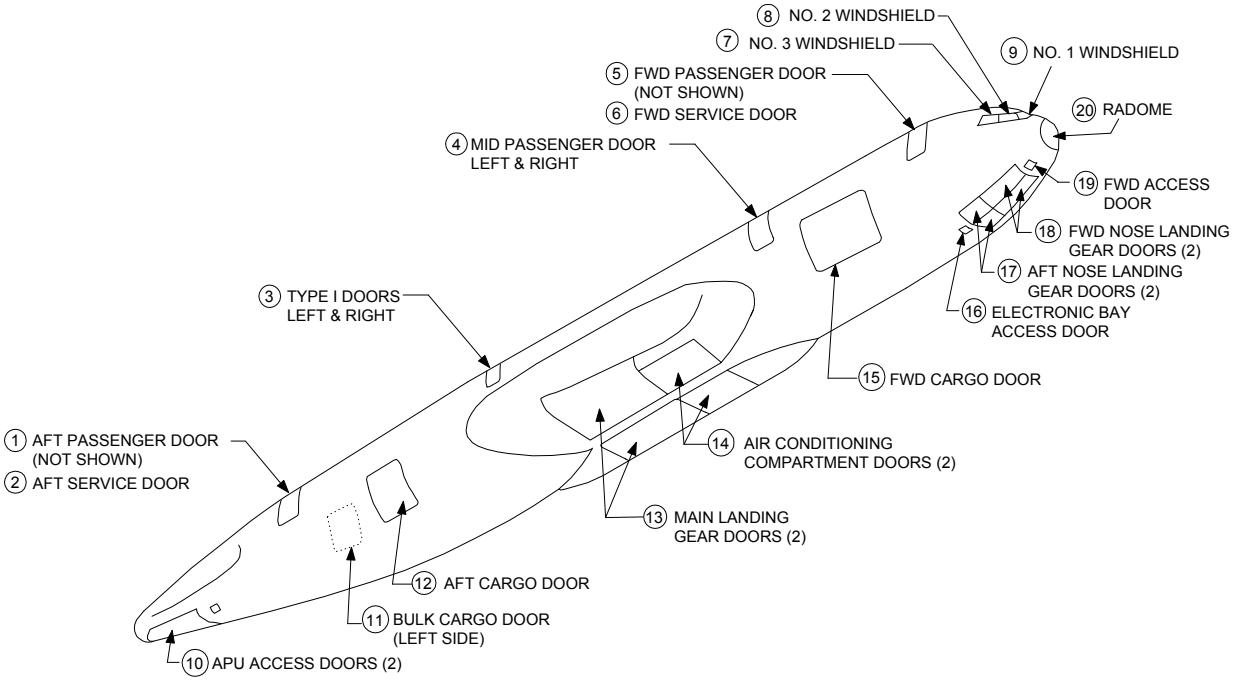

The following table provides nominal weights and balance arms for body components from the above illustration. Values from this table should only be used to determine approximate weight and balance for specialized types of maintenance.

ITEM NO.	BODY COMPONENTS	WEIGHT		B.A. IN.
		LB/EA	KG/EA	
1	Aft Passenger Door	210	95	1643
2	Aft Service Door	205	93	1643
3	Type I Doors (Left & Right)	90	41	1168
4	Mid Passenger Door (Left & Right)	210	95	601
5	Fwd Passenger Door	210	95	196
6	Fwd Service Door	205	93	196
7	No. 3 Windshield (Left & Right)	46	21	79
8	No. 2 Windshield (Left & Right)	56	25	54
9	No. 1 Windshield (Left & Right)	108	49	39
10	APU Access Doors (2)	30	14	1999
11	Bulk Cargo Door (Left Side)	100	45	1571
12	Aft Cargo Door	400	181	1440
13	Main Landing Gear Doors (2)	266	121	1015
14	Air Conditioning Compartment Doors (2)	63	29	896
15	Fwd Cargo Door	975	442	427

APPLICABLE CONFIGURATIONS
All

-BOEING PROPRIETARY-

COMPONENT WEIGHTS AND BALANCE ARMS (Continued)

ITEM NO.	BODY COMPONENTS (Continued)	WEIGHT		B.A. IN.
		LB/EA	KG/EA	
16	Electronic Bay Access Door	22	10	194
17	Aft Nose Landing Gear Door (2)	24	11	141
18	Fwd Nose Landing Gear Door (2)	30	14	86
19	Fwd Access Door	19	9	33
20	Radome	85	39	-6

APPLICABLE CONFIGURATIONS
All

-BOEING PROPRIETARY-

COMPONENT WEIGHTS AND BALANCE ARMS

MAIN GEAR COMPONENTS

Some of the removable main gear components are illustrated in the following figure:

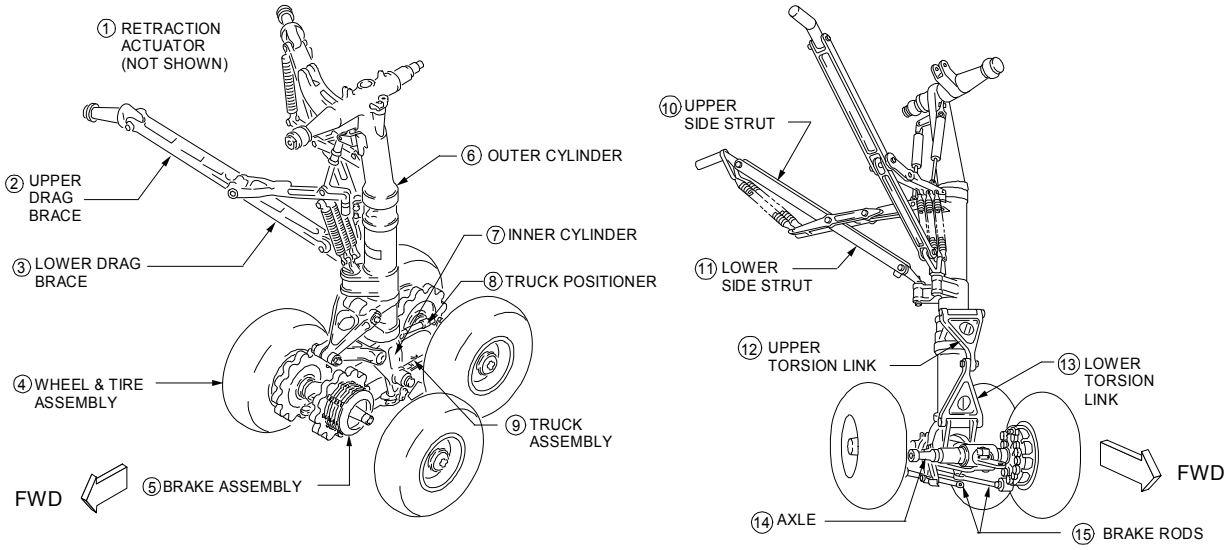

The following table provides nominal weights and balance arms for main gear components from the above illustration. Values from this table should only be used to determine approximate weight and balance for specialized types of maintenance.

ITEM NO.	MAIN GEAR COMPONENTS	WEIGHT		B.A. IN.
		LB/EA	KG/EA	
1	Retraction Actuator (Not Shown)	185	84	1021.0
2	Upper Drag Brace	90	41	987.5
3	Lower Drag Brace	70	32	1016.5
4	Wheel & Tire Assembly (4)	441	200	1046.5[a]
5	Brake Assembly - Carbon Brakes	195	88	1046.5[a]
6	Outer Cylinder and Trunnion	920	417	1034.1
7	Inner Cylinder	450	204	1042.7
8	Truck Positioner	20	9	1065.2
9	Truck Assembly (Beam & Pivot Pin)	340	154	1046.3
10	Upper Side Strut	70	32	1054.4
11	Lower Side Strut	50	23	1048.5
12	Upper Torsion Link	80	36	1030.5
13	Lower Torsion Link	80	36	1030.5
14	Axle	120	54	1046.5[a]
15	Brake Rods (4)	20	9	1046.5
	Complete Assembly	5800	2631	1040.9

[a] The balance arm for the wheels, tires, brakes and axles are as follows:
Fwd: 1018.5, Aft: 1074.5

APPLICABLE CONFIGURATIONS
All

-BOEING PROPRIETARY-

COMPONENT WEIGHTS AND BALANCE ARMS

NOSE GEAR COMPONENTS

Some of the removable nose gear components are illustrated in the following figure:

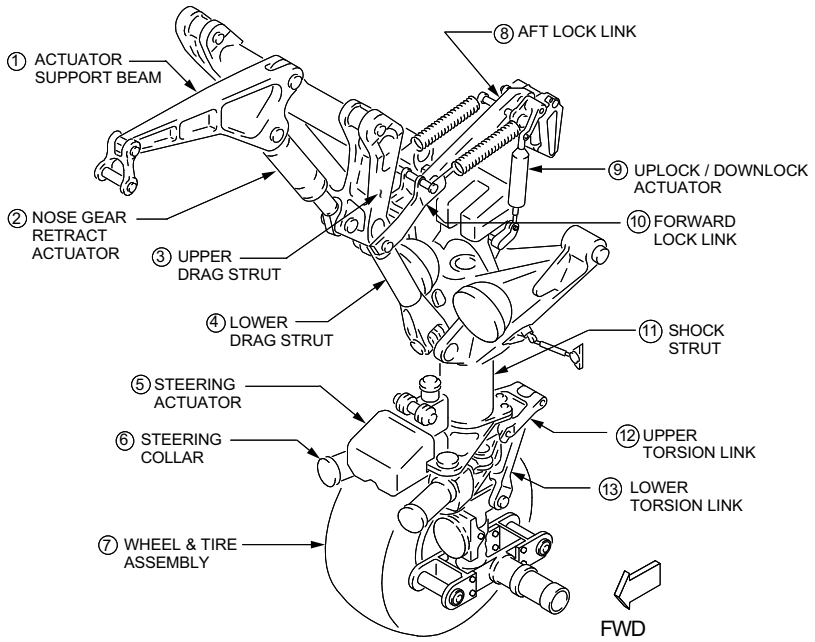

The following table provides nominal weights and balance arms for nose gear components from the above illustration. Values from this table should only be used to determine approximate weight and balance for specialized types of maintenance.

ITEM NO.	NOSE GEAR COMPONENTS	WEIGHT		B.A. IN.
		LB/EA	KG/EA	
1	Actuator Support Beam	70	32	91.6
2	Retraction Actuator (Wet)	100	45	108.0
3	Upper Drag Strut	210	95	113.0
4	Lower Drag Strut	45	20	132.0
5	Steering Actuator (Wet)	55	25	135.5
6	Steering Collar	50	23	144.0
7	Wheel & Tire Assembly (2)	170	77	150.5
8	Aft Lock Link	10	5	150.0
9	Uplock Downlock Actuator (Wet)	6	3	104.0
10	Forward Lock Link	6	3	131.0
11	Shock Strut	600	272	148.9
12	Upper Torsion Link	15	7	156.5
13	Lower Torsion Link	20	9	157.0
	Complete Assembly	1730	785	140.2

APPLICABLE CONFIGURATIONS
All

-BOEING PROPRIETARY-

COMPONENT WEIGHTS AND BALANCE ARMS

NACELLE AND POWERPLANT COMPONENTS

Some of the removable nacelle and power plant components are illustrated in the following figure:

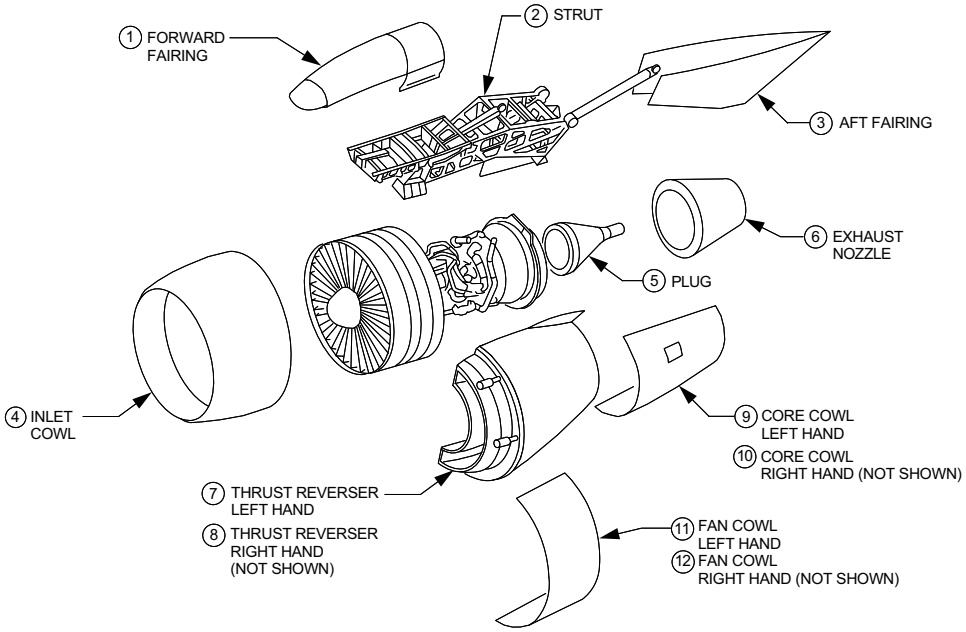

The following table provides nominal weights and balance arms for nacelle and power plant components from the above illustration. Values from this table should only be used to determine approximate weight and balance for specialized types of maintenance.

ITEM NO.	NACELLE AND POWER PLANT COMPONENTS	WEIGHT		B.A. IN.
		LB/EA	KG/EA	
	NACELLE COMPONENTS			
1	Forward Fairing	68	31	818
2	Strut with Systems	1147	520	858
3	Aft Fairing	214	97	945
4	Inlet Cowl	489	222	725
5	Plug	42	19	931
6	Exhaust Nozzle	226	102	937
7	Thrust Reverser - Left Hand	723	328	825
8	Thrust Reverser - Right Hand	691	313	825
9	Core Cowl - Left Hand	66	30	890
10	Core Cowl - Right Hand	94	43	888
11	Fan Cowl - Left Hand	107	49	776
12	Fan Cowl - Right Hand	133	60	779
	POWER PLANT PACKAGE **(Includes: Bare Engine, Residual Fluid and Engine Systems)**			
	GE CF6-80C2	10180	4618	832
	AUXILIARY POWER UNIT (NOT SHOWN) (Includes: Generator)	576	261	2009

APPLICABLE CONFIGURATIONS
All

-BOEING PROPRIETARY-

LOADING SCHEDULE DEVELOPMENT

INTRODUCTION

Federal Aviation Regulations Part 121 states that the airplane shall be operated in accordance with a loading schedule which ensures that the airplane gross weight and center of gravity limitations are not exceeded.

A loading schedule is generally comprised of two parts: the substantiation of the loading schedule development, and a manifest / load sheet which is the form used to manifest the aircraft and check the balance condition of an aircraft prior to its flight. The manifest is generally a tabular form used to document the aircraft load. The load sheet includes operational center of gravity limits along with a method to calculate the balance effect of loaded items. Operational center of gravity limits are derived by applying curtailments to the certified center of gravity limits to ensure that all loading situations will fall within the certified center of gravity limits.

Example Loading Schedule

The example loading schedule document describes the method of developing a loading schedule using a generic airplane configuration. This document's function is to provide an example of loading schedule development and substantiation. It contains the following:

- An example loading problem to assist in understanding airplane loading procedures
- Equations used to develop a loading schedule
- Passenger cabin zones and cargo compartment definitions
- Cargo load limits
- Incremental load item index development methodology
- Horizontal stabilizer trim settings
- Development and application of curtailments to the structural center of gravity limits
- Sample manifest / load sheet construction using the data developed in the document

This document will be delivered with the first publication of the airline WBM Chapter 1. It may also be ordered from Data and Services Management as described in "Ordering Instructions" section on page 2.

Customized Loading Schedule

A customized loading schedule is completely tailored to the specific customer requirements. In certain cases, multiple aircraft configurations may be substantiated within one document, along with one or more manifest / loadsheets. Other features which can be customized include, but are not limited to, the following:

- Customer specified passenger and baggage weight allowances
- Customer specified manifest / load sheet format and content
- Revisions may be purchased (requires a Technical Assistance Contract)

The amount of customizing generally requires a significant amount of coordination between a knowledgeable airline representative and the loading schedule developer. A customized loading schedule may be purchased using a Technical Assistance Contract as described below.

APPLICABLE CONFIGURATIONS
All

-BOEING PROPRIETARY-

LOADING SCHEDULE DEVELOPMENT (Continued)

ORDERING INSTRUCTIONS

An example loading schedule or a copy of an existing customized loading schedule, may be ordered from Data and Services Management as follows:

DOCUMENT TYPE	DOCUMENT TITLE	CATALOG NUMBER
Example (Two Types)	Loading Schedule Substantiation Document: TYPE[a]	D043T630-TBCyy
Customized	Loading Schedule Substantiation Document: NAME[b]	D043T630-xxxyC[c]

[a] "TYPE" is either *Example Alignment Type System*, and "yy" = 01; or *Example Universal Index Type System*, and "yy" = 02

[b] Replace "NAME" with the Airline Name

[c] Replace the "xxx" with the airline three-letter code, and replace the "y" with the document serial no.

Direct your order to:

ORDERS BY TELEX/FAX

Fax: 206-544-9077

Attn: Data and Services Management
P.O. Box 3707
Seattle, Washington 98124-2207

ORDERS BY TELEPHONE

Call the Boeing Operator at 206-655-2121 and ask for Data and Services Management

Development of a customized loading schedule can be arranged using a Technical Assistance Contract. For further information, please contact:

Boeing Commercial Airplane Group
Attn: Contracts Director, Fleet Support
P.O. Box 3707
Seattle, Washington 98124-2207
Boeing Operator Phone: 206-655-2121
(ask for Contracts Director)
Telex: 32-9430
TWX: 910-423-1563

APPLICABLE CONFIGURATIONS
All

-BOEING PROPRIETARY-